CATALOGUE

CONVEYOR ROLLERS, BEARINGS/BLOCKS, DRUMS AND ACCESSORIES

ESCH
CONVEYOR
COMPONENTS

ESCH
CONVEYOR
COMPONENTS

ASAHI

Esch Conveyor Components located in Waalwijk is a manufacturer of conveyor rollers, drums, and motor rollers as well as a supplier of Asahi bearings and bearing blocks. The team of professional, enthusiastic employees with more than 65 years of experience and a hi-tech production facility aim to: Provide you with the perfect roller! Let me take you through the ECC experience.

Once your request has been submitted, the sales team will start working on your requirements. If a standard roller from the product range is suitable, it is immediately compiled with the aid of the product configurator and converted into an offer that you can use quickly. If you have more specific needs and require customized rollers, we will be happy to spend extra time on them. In addition to providing technical advice, we discuss various solutions with you. Putting end products on demand, converting forecasts into supply plans, and joining forces to find solutions.

At the time a suitable solution has been found, the logistics team takes over. Your purchase order, demand planning, or any other requirement is carefully converted into production orders. Work planners, schedulers, and buyers jointly strive for the timely start of the required production.

Once production is released, the production team, guided by Shop Floor Control, knows exactly which parts to make and when to meet the confirmed delivery time. However, quality always remains a guiding principle. The production team strives for continuous improvement, keeps its processes lean, and is always in control. We see our catalogue as a tool to help you find an optimal solution to your problem. Whether you operate in package sorting, e-commerce, bulk transport, agricultural and horticultural logistics, baggage handling, food industry, or any other form of internal logistics, we are happy to work towards a solution with you.
It is no coincidence that our motto is: "**Always on the move!**"

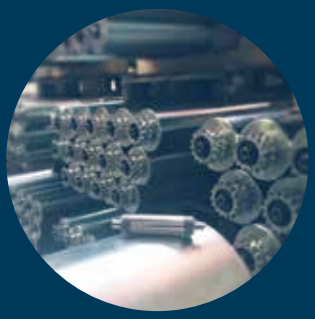

HISTORY

2020	Introduction of new corporate identity and Esch Conveyor Components as the new name.
2015	Second generation at the helm. Merging branches at new production location of over 9000 m^2 in Waalwijk.
2010	Establishment of the Esch Group. Merger of Stas, Conveyor Components, and HTEC.
2006	Start of cnc production of sprockets, turning, and milling parts with the establishment of HTEC.
1996	ASAHI-Japan is a European dealer of bearings and bearing blocks. European stock of ASAHI housed at Stas, thus guaranteeing fast delivery. Stas starts supplying conveyor rollers with DIN standard from stock.
1988	Conveyor Components starts up the production of conveyor rollers in addition to the trading branch and develops this into a core business.
1986	Conveyor Components, a supplier of conveyor rollers, drive and reversing drums, and motor rollers, is founded.
1954	Establishment of Stas, a manufacturer of conveyor rollers, drive and reversing drums. Supplier of bearings and belt-related products.

ESCH CONVEYOR COMPONENTS

Legend
SK = Gravity and conveyor rollers
FRE = Friction roller adjustable
FR = Friction rollers
SR = Steel tube
FE = Fixed drive rollers
KR = Plastic tube

	Page	Type				Description	do	ds	Maximum load capacity (N)	Tube-Ø																	SR*	KR*	Shaft-Ø														Maximum speed m/s	Note
		SK*	FR*	FE*	FRE*					20	30	32	40	48	50	60	60.3	63	63,5	70	80	88,9	90	101,6	108	133	159			5	6	8	ZK8	10	ZK11	12	14	ZK14	15	17	ZK17	20	25	30	20	
Gravity and conveyor rollers	22	50 / 51				Ball row			100	x	x	x	x														x	x	x	x	x		x		x	x									0,3	
	24	60				Precision ball bearing			600		x	x	x														x				x		x		x	x									1,5	
	26	100				Ball row			200						x	x			x								x	x		x	x	x	x	x	x									0,3	
	28	110				Ball row			250						x												x	x			x		x	x	x									0,3	
	30	150				Slide bearing			150						x	x	x		x								x	x			x		x		x	x									0,3	
	32	190				Conical bearing			250						x	x			x								x	x					x	x	x	x									0,5	
	34	200				Conical bearing			1600		x		x		x	x					x						x			x	x		x	x	x										0,6	
	36	220				Conical bearing			2400						x	x					x						x						x		x			x							0,8	
	38	250 / 251				Precision ball bearing			2400				x		x	x					x						x				x		x	x	x	x		x	x						1,2	
	40	255				Precision ball bearing			2400										x		x	x					x							x	x		x		x	x	x				1,2	
	42	260 / 261				Precision ball bearing			5000										x	x	x	x			x		x												x		x	x			1,2	
	44	290				Precision ball bearing			1200				x														x				x		x	x	x	x		x							1,2	
	46	300				Precision ball bearing			1600						x	x	x	x		x	x	x	x				x	x			x		x	x	x	x									2	
	48	301				Precision ball bearing			1600						x	x	x	x		x	x						x				x		x		x	x		x	x						2	
	50	302				Precision ball bearing			1600				x		x	x											x				x		x	x	x	x		x							2	
	52	306/307/308/309				Precision ball bearing			1600		x		x	x	x	x			x		x	x			x		x	x																		
	54	310				Precision ball bearing			2400						x												x							x	x	x									2	
	56	320				Precision ball bearing			600																																					
	58	350				Precision ball bearing			2400						x												x											x				x			2	
	60	360				Precision ball bearing			2400							x		x		x		x			x		x	x													x			0,5	
	62	380				Precision ball bearing			2000													x			x			x													x			1,5	
	64	400				Precision ball bearing			3600						x	x			x		x	x	x		x	x	x														x	x		1,2	
	66	400 CC				Precision ball bearing			2400										x		x	x		x	x		x														x			1,2	
	68	401				Precision ball bearing			1600				x		x												x				x		x		x	x			x						1,2	
	70	401 CC				Precision ball bearing			5000										x		x	x			x	x	x														x	x	x	1,2	
	72	402				Precision ball bearing			3600				x			x			x		x	x			x		x				x		x		x	x			x		x			1,2	
	74	402 K				Precision ball bearing			3600	x	x	x	x	x	x	x	x	x	x	x	x	x	x		x	x	x											x	x		x	x		1,2	
	76	402 ST				Precision ball bearing			5000						x	x	x		x	x	x	x	x		x	x	x											x	x		x	x		1,2	
Driven rollers	80		420			Plastic - V-belt PJ profile			500						x												x						x	x	x	x		x							1,2	
	82		421 ST			Steel – V-belt PJ profile			500						x												x						x	x	x	x		x							0,5	
	84		423			Plastic roundbelt with two grooves			300						x												x						x	x	x	x		x							1,2	
	86		432	433		Steel double chain sprocket 3/8" x 7/32" z=12	36,8	25	400		x	x															x	x			x													0,5	
	88		435	436		Steel single chain sprocket 3/8" x 7/32" z=10	30,82	19	400		x	x															x	x			x													0,3	
	90		445	446		Plastic single chain sprocket T8 z=20 polychain toothing			600						x	x	x	x	x		x						x								x	x		x							0,8	
	92				445 ST	Steel tooth belt wheel T8 z=20 polychain toothing			1000						x	x	x	x	x		x						x											x							0,8	
	94			447		Steel tooth belt wheel T8 z=20 polychain toothing			1500						x	x	x	x	x		x	x					x											x	x						1,2	Welded version
	96		450	451		Plastic single chain sprocket 1/2" x 5/16" z=11			400						x	x	x	x		x	x		x				x	x					x		x	x									0,3	
	98		452	453		Plastic single chain sprocket 1/2" x 5/16" z=11	45,08	29	400						x	x	x	x		x	x		x				x	x					x		x	x									0,3	
	100		454	455		Steel single chain sprocket 1/2" x 5/16" z=11	45,08	29	1000						x	x	x	x	x	x	x		x				x	x					x		x	x			x						0,3	
	102				454 R	Steel single chain sprocket 1/2" x 5/16" z=11	45,08	29	1000						x	x	x	x	x		x						x											x							0,3	
	104			456		Steel single chain sprocket 1/2" x 5/16" z=11	45,08	29	1000						x	x	x		x	x	x						x						x		x	x			x						0,3	Welded version
	106		457	458		Steel single chain sprocket 1/2" x 5/16" z=11			1000						x	x	x	x	x	x	x		x				x	x							x										0,3	
	108		462	463		Steel single chain sprocket 5/8" x 3/8" z=12	61,34	42	1000						x	x	x	x	x	x	x		x				x	x					x		x	x			x						0,3	
	110				462 R	Steel single chain sprocket 5/8" x 3/8" z=12	61,34	42	1000						x	x	x	x	x		x						x											x							0,3	
	112			464		Steel single chain sprocket 5/8" x 3/8" z=12	61,34	42	1500						x	x	x	x	x	x	x		x				x	x					x		x	x			x						0,3	Welded version
	114		470	471		Plastic single chain sprocket 1/2" x 5/16" z=14	57,07	43	400						x	x	x	x		x	x		x				x	x					x		x	x									0,3	
	116		480	481		Plastic double chain sprocket 1/2" x 5/16" z=14	57,07	43	400						x	x	x	x		x	x		x				x	x					x		x	x									0,5	
	118		500	501		Steel double chain sprocket 1/2" x 5/16" z=14	57,07	43	1000						x	x	x	x	x	x	x		x				x	x					x		x	x		x	x						0,5	
	120				500 R	Steel double chain sprocket 1/2" x 5/16" z=14	57,07	43	1000						x	x	x	x	x	x	x		x				x	x								x		x							0,5	
	122			502		Steel double chain sprocket 1/2" x 5/16" z=14	57,07	43	1500						x	x	x	x	x	x	x	x			x		x						x		x	x		x	x						0,5	Welded version
	124		506	507		Steel single chain sprocket 1/2" x 5/16" z=14	57,07	43	1000						x	x	x	x	x	x	x		x				x	x					x		x	x		x	x						0,3	
	126				506 R	Steel single chain sprocket 1/2" x 5/16" z=14	57,07	43	1000						x	x	x	x	x		x						x											x							0,3	
	128			508		Steel single chain sprocket 1/2" x 5/16" z=14	57,07	43	1500						x	x	x	x	x	x	x	x			x	x		x						x		x	x		x	x						0,3	Welded version
	130			510		Steel double chain sprocket 5/8" x 3/8" z=15	76,36	59	3400										x		x	x			x	x	x	x														x	x	x	0,5	Welded version
	132			511		Steel single chain sprocket 5/8" x 3/8" z=15	76,36	57	3400										x		x	x			x	x	x	x														x	x	x	0,3	Welded version
	134			512		Steel double chain sprocket 3/4" x 7/16" z=13	79,6	60	4000												x	x			x	x	x	x														x	x	x	0,5	Welded version
	136			513		Steel single chain sprocket 3/4" x 7/16" z=13	79,6	60	4000												x	x			x	x	x	x														x	x	x	0,3	Welded version
	138			516		Plastic tooth belt wheel T8 z=30 Polychain			1800												x	x			x			x														x			0,8	Welded version
	140			517		Plastic tooth belt wheel T8 z24 / z25 HTD			1200												x	x			x			x														x			0,8	Welded version
	142			517		Plastic tooth belt wheel T8 z30 / z34 HTD			1200												x	x			x			x														x			0,8	
	144			518		Plastic double chain sprocket 5/8" x 3/8" z=18	91,42	74	1800												x	x			x			x														x			0,5	
	146			519		Plastic single chain sprocket 5/8" x 3/8" z=18	91,42	74	1800												x	x			x			x														x			0,3	
	148		520			Steel double chain sprocket 5/8" x 3/8" z=15	76,36	59	1800												x	x			x			x														x			0,5	
	150				520 R	Steel double chain sprocket 5/8" x 3/8" z=15	76,36	59	1800												x	x			x			x														x			0,5	
	152		521			Steel single chain sprocket 5/8" x 3/8" z=15	76,36	57	1800												x	x			x			x														x			0,3	
	154				521 R	Steel single chain sprocket 5/8" x 3/8" z=15	76,36	57	1800												x	x			x			x														x			0,3	
	156			522		Plastic double chain sprocket 5/8" x 3/8" z=15	76,36	59	1200												x	x						x														x			0,5	
	158			523		Plastic single chain sprocket 5/8" x 3/8" z=15	76,36	57	800												x	x						x														x			0,5	
	160				533 R	Steel tooth belt wheel T8 z30 / z34 HTD			1800												x	x			x			x														x			0,8	
	162			534		Steel tooth belt wheel T8 z30 / z34 HTD			1800												x	x			x	x		x														x	x	x	0,8	Welded version
	164			539		Steel V-Belt PK profile			2000												x	x			x			x														x			0,8	Welded version
Conical rollers	170		540	541		Plastic double chain sprocket 1/2" x 5/16" z=14	57,07	43	400						x												x	x					x		x	x									0,5	
	172		542	543		Plastic single chain sprocket 1/2" x 5/16" z=14	57,07	43	400						x												x	x					x		x	x									0,5	
	174		550	551		Steel double chain sprocket 1/2" x 5/16" z=14	57,07	43	400						x												x	x					x		x	x									0,5	
	176		552	553		Steel single chain sprocket 1/2" x 5/16" z=14	57,07	43	400						x												x	x					x		x	x									0,5	
	178			563		Steel double chain sprocket 3/8" x 7/32" z=12			100	x																	x	x			x														0,5	
	180		566	567		Steel double chain sprocket 3/8" x 7/32" z=12	49,07	25	200		x																x	x			x														0,5	
	182			568		Plastic - V-belt PJ profile			400						x												x						x	x	x	x		x							0,5	
	184			570		Plastic round belt pulley with 2 grooves			300						x												x						x	x	x	x		x							0,5	
	186	600				Plastic steel housing with precision ball bearing			400						x												x	x					x		x	x									0,5	
	188	601				Plastic steel housing with Ball Row			100	x																	x	x			x														0,5	
	190	602				Plastic steel housing with Ball Row			100		x																x	x			x		x												0,5	
Zero pressure conveying system	197					Type 530 Clutch																																							
	198					Type 531 Clutch																																							
	199					Type 530 S (Light sensor)																																							
	201					Type 530 Z / 531 Z (Pneumatic cylinder)																																							
	203					Type 536E (Electromagnetic clutch 24V DC)																																							
	205					Rollex drive system																																							
	209					Rollex-Multi-Drive-Card																																							
Motor rollers	216					Motor roller 840 (24 V DC) brushless									x												x																		
	220					Motor roller 850 (230/400V) 0,12KW																x					x																		
Belt rollers	230	380				Precision ball bearing			2000													x			x			x													x			1,5	
	66	400 CC				Precision ball bearing			2400										x		x	x		x	x		x													x			1,2	
	70	401 CC				Precision ball bearing			5000										x		x	x			x	x	x														x	x	x	1,2	
Brake rollers	238					Type 700 direct braking															x						x																		
	240					Type 710-86 indirect braking																																							
	240					Type 710-120 indirect braking																																							
Accessories	244					Universal rollers																																							
	248					Guide Flanges, buffer and back up rings																																							
	250					Roller rails																																							

General Information

In the general chapter you will find information for **selecting** and **dimensioning** of roller. A conveyor roller normally consists of the tube, shaft and bearing.

Basically, the materials and the construction of the roller should be chosen regarding the requirements.

Which dimensions, weight and characteristics does the transported goods have and which demands does the transportation facility have to cover?

Important information:

- Roller length
- Tube and shaft dimension
- Bearing
- Shaft center distance
- Conveying speed
- Roller component materials of the roller device group
- Selection of the drive elements

The bearing, tube and shaft variations must be selected in such a way that the weakest construction unit is suitable for the required load capacity.

Even technical requirements like electrical discharging or the consideration of the environmental conditions such as temperature, air humidity, wetness etc. must be considered for the configuration.

Selection of a Conveyor Roller

The construction of a conveyor roller normally consists of the tube, shaft and bearing. For a driven roller you must add the driving elements.

Further details can be obtained by the following information.

Types of Tube

The construction of the transportation facility and the capacity of the tube affect the Tube Ø (see end of cover Page).

Steel tubes: Conveyor roller tube EN 10 305-3 (DIN 2394) with limited tolerance material S235JR (ST37)

Tube-Ø	Tube Thickness							
in mm	1 mm	1,5 mm	2 mm	2,9 mm	3 mm	3,25 mm	3,6 mm	4 mm
16	X							
20		X						
30	X	X						
32			X					
40		X	X		X			
50		X	X		X			
60			X		X			
63,5				X				
70			X	X				
80			X*		X			
88,9				X				
108						X		
133							X	
159								X

Concentricity: The DIN only gives the tolerance for the wall thickness and the rectitude.

Concentricity

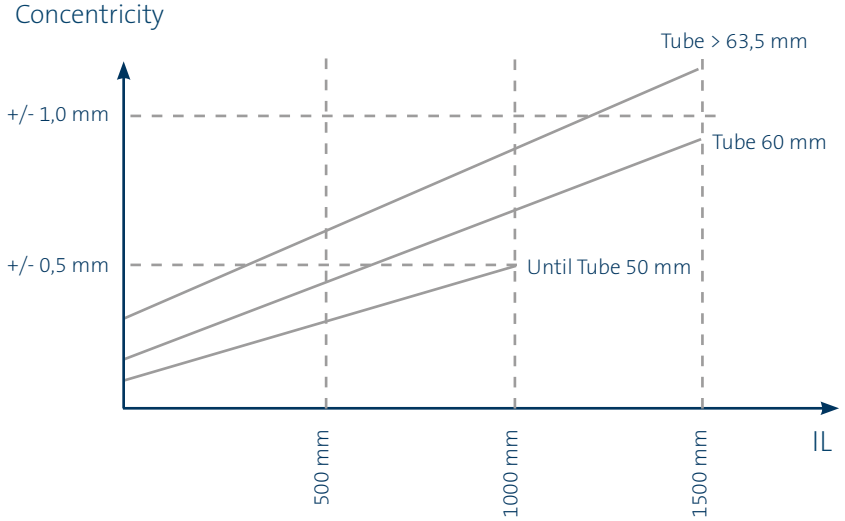

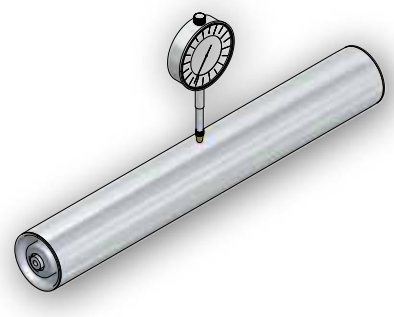

* only deliverable in dimension Ø 79,5 x 1,75 mm.

Types of Tube

Plastic Tube: Material – shock resistant special PVC.
Three different colors are available RAL 5015 / blue – RAL 7011 / grey and RAL 7031 / light grey.

Tube-Ø	Tube Thickness					
in mm	1,5 mm	1,8 mm	2,3 mm	2,8 mm	3 mm	7 mm
20	X					
30		X				
40			X			
50				X		
63					X	
90						X

Concentricity

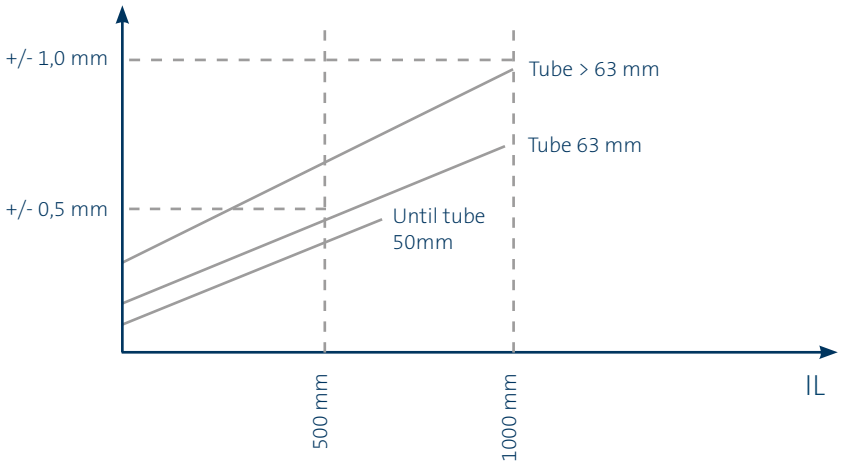

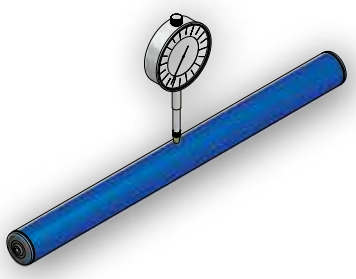

Types of Tube

Stainless Steel Tube: Material 1.4301 (X5CrNi18-10 / AISI 304).

Tube-Ø	Tube Thickness					
in mm	1 mm	1,5 mm	1,65 mm	2 mm	2,9 mm	3 mm
16	X					
20	X					
30	X	X				
40		X				
50		X		X		
60,3			X			
80				X		X
88,9					X	

Concentricity: The DIN only gives the tolerance for the wall thickness and the rectitude.

Concenticity:

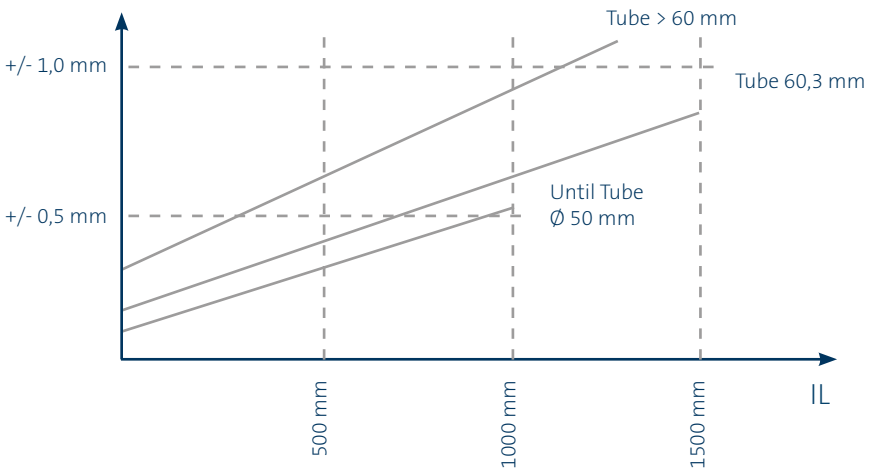

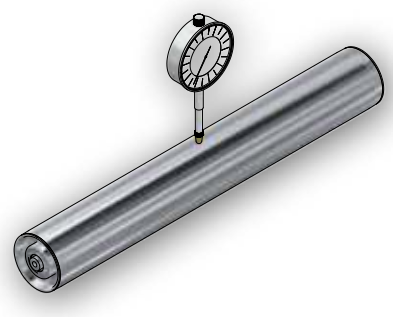

Types of Tube

Esch Conveyor Components offers several types of **surface treatments** and **coatings**. Depending on the requirement you can choose between the following tube surface refinements:

Untreated: The roller tubes are not treated. They are designated with the code ST (Steel Tube), R (Stainless Steel Tube), KB or KGH (Plastic Tube).

Galvanized: The galvanizing has a thickness of around 0,8µm. It is for corrosion protection, but please note that this protection can be destroyed by mechanic and thermic influences. At this part the tubes may start rusting. Galvanized tubes are marked with the code STV. Driven roller that must be galvanized in total (incl. Drive Element) have the code ST with the addition „galvanized in total ".

PVC-Coating: The PVC-Coating will be made by air pressure. Esch Conveyor Components offers several different styles and dimensions:

PVC 60º Shore silver grey

Tube-Ø	PVC 2 mm	PVC 3 mm	PVC 5 mm
30 mm	X		
40 mm	X	X	X
50 mm	X	X	X
60 mm	X	X	X
80 mm	X	X	X
88,9 mm	X	X	X
108 mm		X	X

PVC 60º Shore anthracite – anti-static

Tube-Ø	PVC 2 mm	PVC 3 mm	PVC 5 mm
50 mm	X	X	
60 mm	X	X	

PVC 88º Shore black

Tube-Ø	PVC 2 mm	PVC 3 mm	PVC 5 mm
50 mm		X	
60 mm		X	X

Types of Tube

Rubberizing: The tube will be coated with a black neoprene NBR-Rubber. This will be glued and grinded the required thickness. Hardness is around 60° Shore, and it is available for all popular tube dimensions. Tube 40 Ø with 5 mm coating can be delivered with rubber sleeves (standard) or as vulcanized coating.

PU-Baytec coating: Tubes can even be coated with a PU (Polyurethan). You can choose between PU Baytec 73° Shore black and PU nature, in different grades (70 – 90° Shore).

Epoxy Resincoating: Esch Conveyor Components steel roller with epoxy resin coating. In case of order Coating: please mention RAL color code. Standard in RAL9000.

Nitrocarburization: This means the enrichment of the tube surface layer with nitrogen and carbon by the mochemical means. This causes a nitride case containing a compound layer and a diffus on layer. It is a hardening method for surfaces, that means the depth is only maximum 0,2 mm. The border zone only has a hardness of maximum 540 HV1.

Description:			
	Steel Tube	Steel	ST
		Galvanized	STV
		Aluminium	A
		PVC-coated	STP
		Rubberized	STR
		PU-coated	STPU
		Epoxy resin coated	STE
		Nitrocarburized	STH
	Plastic Tube	PVC shock resistant blue RAL 5015	KB
		PVC shock resistant grey RAL 7030A	KG
	Stainless Steel Tube	Materiaal 1.4301	R304

Type of Shaft

Material: Esch Conveyor Components uses machining steel according to DIN EN 10277-3 or EN 10278-h and stainless-steel material AISI 430F.

Dimensions: The construction of the transportation facility and the capacity of the shaft affect the shaft dimension (see end of the cover page).

Shaft dimension in mm	Round axle	Hexagonal axle
5	X	
6	X	
8	X	
AZ 8		X
10	X	
AZ 11		X
12	X	
14	X	X
15	X	
17	X	X
20	X	
25	X	
30	X	
35	X	

Shaft variations: Esch Conveyor Components conveyor rollers are available with different shaft versions.

Order specification Shaft Ø	A...UD...	A...VjM...	A...ID...	A...Glad	A...SW...	A...VA...
						
5				6		6
6	M 6 x 15			8		8
8	M 8 x 15		5 x 10	10		10
AZ 8						10
10	M 10 x 15	8 x 15	6 x 10	10	SW 8 x 10	10
AZ 11						10
12	M 12 x 15	10 x 15	8 x 10	10	SW 10 x 10	10
14	M 14 x 20	12 x 15	8 x 15 10 x 15	10	SW 12 x 10	10
15	M 14 x 20		8 x 15 10 x 15		SW 12 x 10	
17	M 16 x 20	12 x 15	10 x 15 12 x 18		SW 14 x 10	
20	M 20 x 25	16 x 20	10 x 15 12 x 18		SW 14/15 x 10 SW 14/15 x 13	
25		16 x 20	16 x 24		SW 18 x 10/13	

Type of Shaft

Material: Shaft caps are made of plastic and can be used for corrosion protection and noise reducing.

Shaft Ø	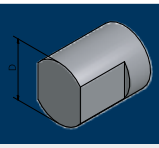	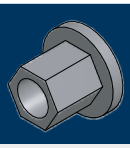	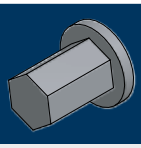	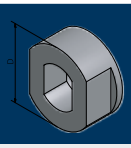
8	SW 10 x 10 D=12 SW 14 x 10 D=16	ZK 11 x 11 ZK 11 x 11 FA	ZK 11 x 17	
10	SW 14 x 10 D=16 SW 12 x 10 D=16			
12	SW 14 x 10 D=16			
14	SW 17 x 10 D=21			
20				SW 30 x 12 D = 36 available in plastic and metal

Bearing house

Esch Conveyor Components uses different bearing housing for the conveyor roller.

Thermoplastic synthetic material:	Bearings made from PA, PP or PC, that make low noise.
Steel bearings:	made from steel or galvanized steel.

Type of Bearing

Esch Conveyor Components uses different types of bearing, that can be chosen by the following requirements.

Slide bearings:	Thermoplastic synthetic material with slide bearing bush made of PA or POM. For light weights and wet environments.
Ball Row:	Thermoplastic synthetic material made of PP with steel- or stainless-steel balls. For light weights.
	Conus ball bearing made of hardened steel. For light and medium weights.
Precision ball bearing:	Precision ball bearing light greased according to DIN 625. Available in different sealings like ZZ, RS or Z.
	Series 608, 6000, 6001, 6003, 6004, 6005, 6204, 6202, 6205, 6303, standard bearing CN. If requested other bearings available.

Sealing

Thermoplastic synthetic material bearings are supplied either with a labyrinth packing or a plastic slide sealing that protects the rolling balls against pollution.

Drive Elements

Conveyor rollers can be driven by different ways. The following information is important for the selection of the drive:

- Transport device
- Transport weight
- Transport speed
- Drive concept (accumulation drive/permanent drive)
- Length of the conveyor
- Environmental conditions
- Selection of the driving element

Available types of drive:

- Flat belt drive
  Conveyor rollers are driven by a flat belt mounted below the roller.
  For this concept, all conveyor roller with a precision ball bearing from the Esch Conveyor Components range can be used.

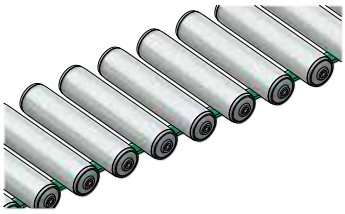

- Round belt drive
  Round belt drives can be constructed in two different versions, either the torque is transmitted from roller to roller or by a so-called upright shaft below the roller. Versions, please see Page 52.

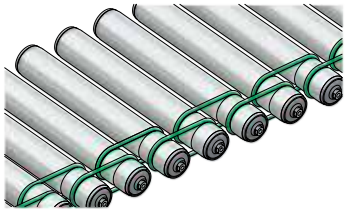

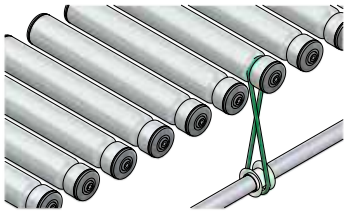

- Ripped-V-Belt Grooved Belt Drive
  Conveyor roller are driven by a Ripped-V-Belt grooved belt, using the roller with a PJ-profile (up to 500 N) or with a PK-profile (up to 10.000 N). The center distance tolerance should be between -1 mm and +1 mm.

Drive Elements

Ripped-V-Belt Grooved Belts

Center distance	Ripped-V-Belt 2 or 3 ribs
55 mm	PJ 246
60 mm	PJ 256
68 mm	PJ 270
73 mm	PJ 282
75 mm	PJ 286
80 mm	PJ 290
90 mm	PJ 314
94 mm	PJ 316
100 mm	PJ 336
105 mm	PJ 346
120 mm	PJ 376

Ripped-V-Belt Drive D = 43 mm

Center distance	Ripped-V-Belt 6 or 8 ribs
145 mm	PK 541
160 mm	PK 573
169 mm	PK 589
180 mm	PK 611
200 mm	PK 651
225 mm	PK 701
250 mm	PK 751
300 mm	PK 801

Ripped-V-Belt Drive D = 80 mm

The Ripped-V-Belt grooved belt with 2 ribs can even be used for curved conveyor lines.
Please note that the angle between the conical roller should be max. 4,5°.

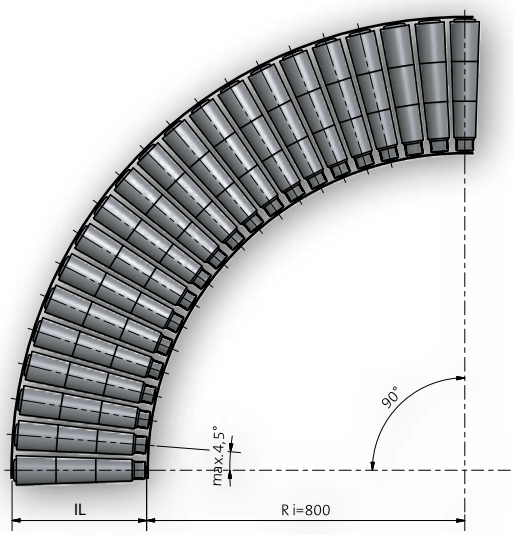

Drive Elements

Tooth Belt Drive:	Conveyor roller are manufactured with a tooth belt drive, using a Poly Chain-toothing or an HTD- toothing. The center distance tolerance should be between 0 to - 0,3 mm.
Chain Drive:	Conveyor roller are manufactured with a chain sprocket, depending on the drive concept (tangential drive or drive from roller to roller).
Tangential Drive:	Using the tangential drive only one chain is required for driving the complete roller track. Please note that for this concept only one tooth of the sprocket is working. The chain is guided by a chain slide bar.

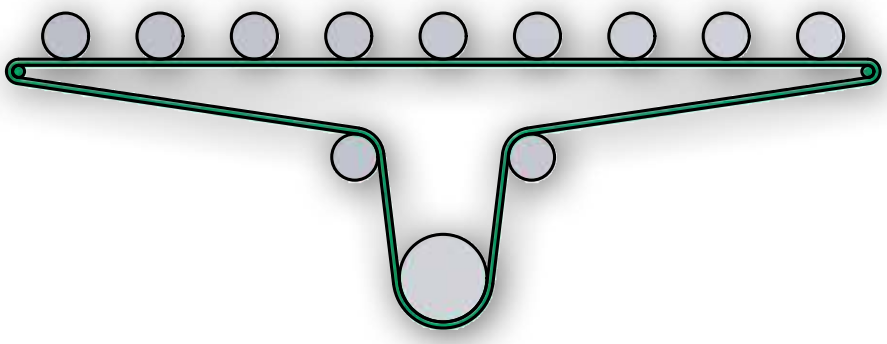

If the tangential chain is installed above the roller the last roller must get a normal tooth profile because the bolt tooth form for tangential drive cannot be used for chain enlacement.

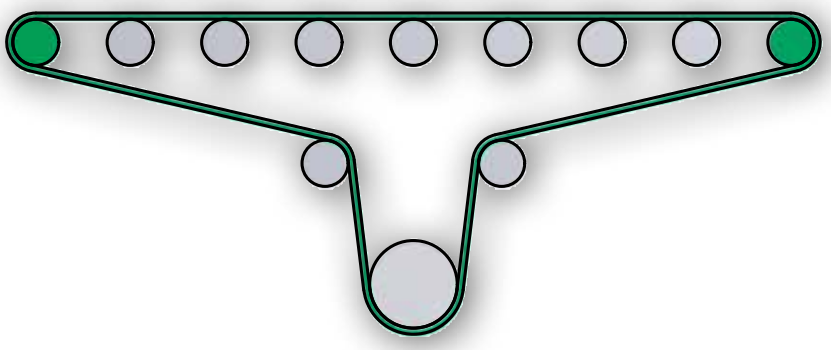

Drive Elements

Drive roller to roller: The drive roller to roller is used with a double chain sprocket. The tolerance of the shaft center should be 0 to + 0,3 mm.

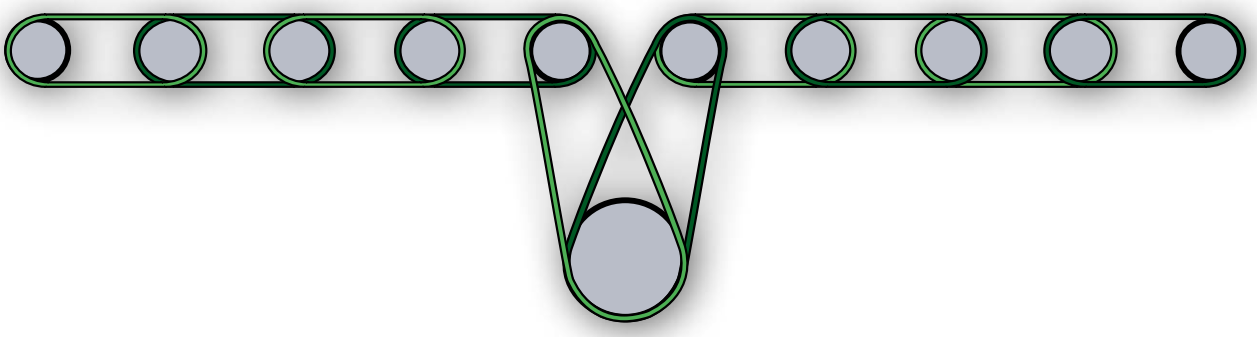

The center-to-center distances for the different chains:

Amount of chain links	3/8 x 7/32“ z = 12	1/2 x 5/16“ z = 14	5/8 x 3/8“ z = 15	3/4 x 7/16“ z = 13
22	47,6			
24	57,2			
26	66,7	76,2		123,8
28	76,2	88,9	103,2	142,9
30	85,8	101,6	119,1	161,9
32	95,3	114,3	134,9	181,0
34	104,8	127,0	150,8	200,0
36	114,3	139,7	166,7	219,1
38	123,9	152,4	182,6	238,1
40	133,4	165,1	198,5	257,2
42	142,9	177,8	214,3	276,2
44	152,4	190,5	230,2	295,3
46		203,2	246,1	314,3
48		215,9	261,9	333,4
50		228,6	277,8	352,4
52		241,3	293,7	371,5
54		254,0	309,6	390,5
56		266,7	325,4	409,6
58		279,4	314,3	428,6
60		292,1	357,2	447,7

Centre-to-center distances in mm of the driving element.

Drive Elements

For dimensioning driven transport, please check the break load of the chains, according to DIN 8187

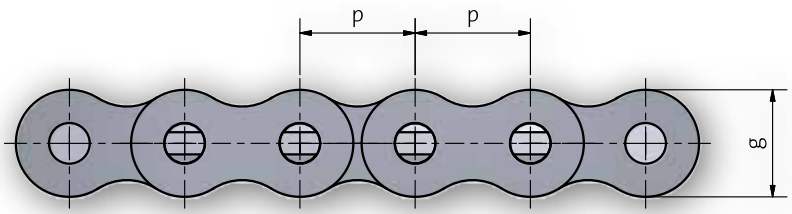

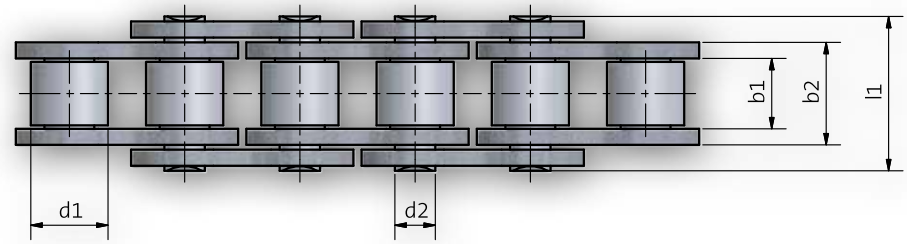

DIN/ISO Chain-No.	Dimensions p x b_1	p	b_1 min.	b_2 max.	d_1 max.	d_2 max.	g max.	Break Load L_1 min.	Break Load N min.
06 B-1	3/8“ x 7/32“	9,525	5,72	8,53	6,35	3,28	8,2	13,5	9000
08 B-1	1/2“ x 5/16“	12,7	7,75	11,3	8,51	4,45	11,8	17	18000
10 B-1	5/8“ x 3/8“	15,88	9,65	13,28	10,16	5,08	14,7	19,6	22400
12 B-1	3/4“ x 7/16“	19,05	11,68	15,62	12,07	5,72	16,1	22,7	29000
16 B-1	1“ x 0,67“	25,4	17,02	25,4	15,88	8,82	21	36,1	60000

Single Roller Chains DIN 8187 (European version) ISO 606- 1982.

Gravity and Conveyor Rollers

Type 50 / 51

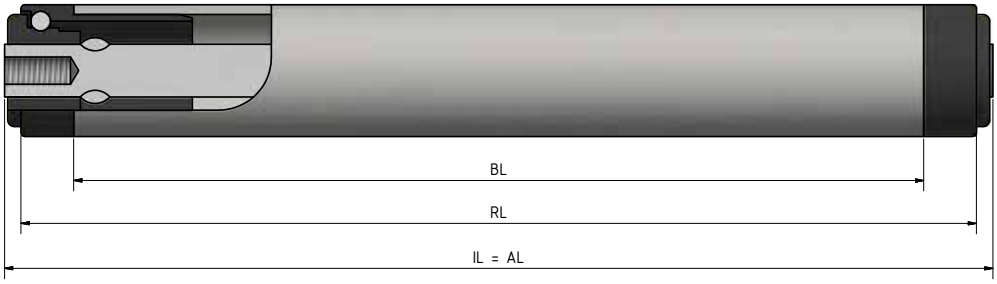

Shaft dimensions

Order Specification		A...UD...	A...ID...	A...Glad	A...VA...
Shaft Ø	IL=				
5	RL+			2	2
6	RL+	15		5	5
8	RL+	18	5	5	5
10	RL+	17	5	5	5

Tube- and Shaft Combination

Tube Ø	A5	A6	A8	A10
16 x 1	x			
20 x 1,5		x	x	
30 x 1		x	x	x
30 x 1,8 KB/KGH		x	x	x
32 x 2		x	x	x
40 x 1,5		x	x	x
40 x 2,3 KB/KGH		x	x	x

Optional	Coatings Page 10	Shaft caps Page 13

Type 50 / 51

Bearing Type	**Thermoplastic synthetic material**
Bearing	Ball Row
Load Capacity	100 N (depending upon the load limit of tube and shaft)
Maximum Speed	0,3 m/s
Range of Temperature	-5° to +45 °C
Optional	Type 51 (Balls Stainless Steel 1.434)
Note	Gravity Roller - not for use as driven roller.
	Tube Ø 16 mm only available with shaft diameter 5 mm.
	For Tube Ø 16 mm BL = RL - 14.

Order Example

Type	**50 - 20x1,5 KB A8 VA IL=200 mm**
Bearing Type	
Tube Ø and wall thickness	
Tube material	
Shaft Ø	
Inbuild in option	
Inbuild in length	

Technical Notes Tube/Shaft Page 7 Bearing Type Page 14 General Information Page 5

Type 60

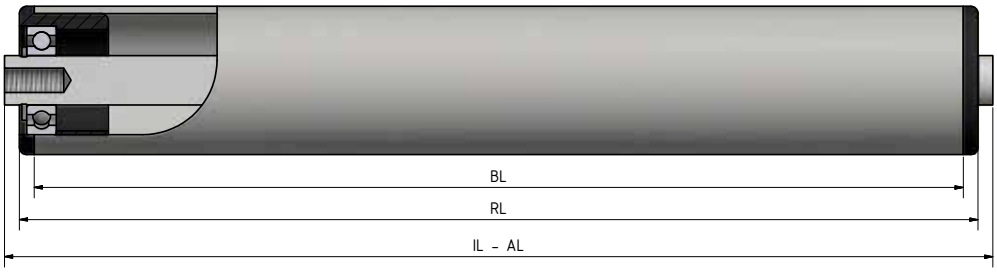

Shaft dimensions

Order Specification		A...UD...	A...ID...
Shaft Ø	IL=		
8	RL+	13	10
10	RL+	12	10

Tube- and Shaft Combination

Tube Ø	A8	A10	A12	A14
30 x 1	x	x		
30 x 1,8 KB/KGH	x			
32 x 2	x	x		
40 x 1,5	x	x	x	x

Optional	Groove for belt drive Page 52	Coatings Page 10

Type 60

Bearing type	**Thermoplastic synthetic material**
Bearing	Ball Bearing (Series 608,6000, 6202) acc. DIN 625. Available in 2 RS, ZZ.
Load Capacity	600 N (depending upon the load limit of tube and shaft).
Maximum Speed	1,5 m/s
Range of Temperature	-5° to +40 °C
Optional	
Note	Shaft with Female Thread only in combination with shaft securing star lock. Anti-static version (only for Steel Tube).

Order Example

Type	**60 RS - 30x1 STV A8 UD8x15 IL=500 mm**
Bearing Type	
Ball bearing sealing	
Tube Ø and wall thickness	
Tube material	
Shaft Ø	
Inbuild in option	
Inbuild in length	

Type 100 / 101 / 102 / 103

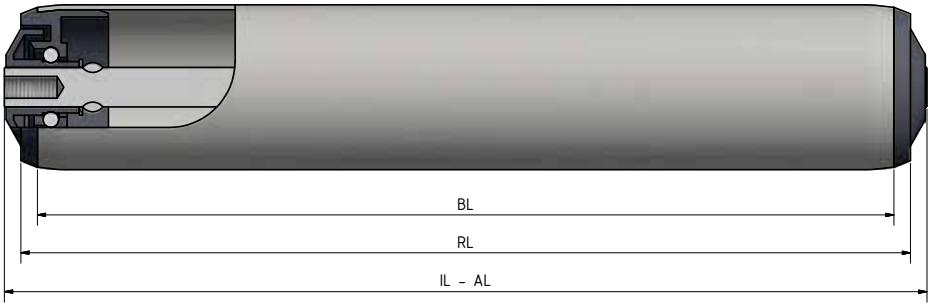

Shaft dimensions

Order Specification		A...UD...	A...VjM...	A...ID...	A...Glad	A...SW...	A...VA...
Shaft Ø	IL=					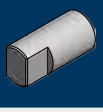	
6	RL+	20			10		10
8	RL+	23		10	10		10
ZA8	RL+				10		10
10	RL+	22	10	10	10	10	10
AZ11	RL+				10		10
12	RL+	24	10	10	10	10	10

Tube- and Shaft Combination

Tube Ø	A6	A8	AZ8	A10	AZ11	A 12
50 x 1,5	x	x	x	x	x	x
50 x 2,8 KB/KGH	x	x	x	x	x	x
60,3 x 1,65	x	x	x	x	x	x
63 x 3 KB/KGH	x	x	x	x	x	x

Optional	Coatings Page 10	Shaft caps Page 13

Type 100 / 101 / 102 / 103

Bearing Type	**Thermoplastic synthetic material**
Bearing	Ball Row
Load Capacity	200 N (depending upon the load limit of tube and shaft).
Maximum Speed	0,3 m/s
Range of temperature	-5° to +40 °C
Optional	Type 101 (with cage)
	Type 102 (balls Stainless Steel 1.4301/1.4401)
	Type 103 (balls Stainless Steel 1.4301/1.4401 with cage)
Note	Not suitable as a driven Roller

Order Example

Type	**100 - 50x2,8 KB A8 VA IL=500 mm**
Bearing Type	
Tube Ø and wall thickness	
Tube material	
Shaft Ø	
Inbuild in option	
Inbuild in length	

Technical Notes Tube/Shaft Page 7 Bearing Type Page 14 General Information Page 5

Type 110

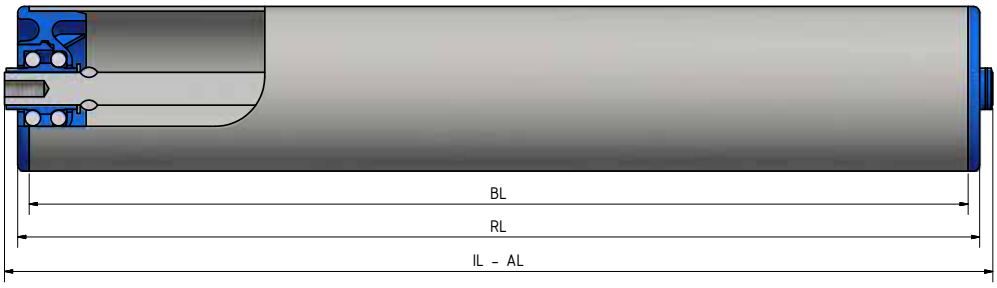

Shaft dimensions

Order Specification		A...UD...	A...VJ...	A...ID...	A...Glad...	A...SW...	A...VA...
Shaft Ø	IL=	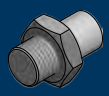					
8	RL+	17	8	8	7	8	7
10	RL+	19	8	8	7	8	7
AZ11	RL+	21	8	8	7	8	7
12	RL+	21	8	8	7	8	7

Tube- and Shaft Combination

Tube Ø	A8	A10	AZ11	A12
50 x 1,5	x	x	x	x
50 x 2	x	x	x	x
50 x 2,8 KB/KGH	x	x	x	x

Optional	Coatings Page 10	Shaft caps Page 13

Type 110

Bearing Type	**Thermoplastic synthetic material**
Bearing	Double ball row
Load Capacity	250 N (depending on the load between shaft and tube).
Maximum Speed	0,3 m/s
Range of Temperature	-5 ° to +40 °C
Optional	Type 110R (ball made of stainless steel 1.4301/1.4401)
Note	Smooth-running gravity roller.
	Often used in foodstuffs and logistics center.

Order Example

Type	**110 - 50x2,8 KB A8 VA IL=500 mm**
Bearing Type	
Tube Ø and wall thickness	
Tube material	
Shaft Ø	
Inbuild in option	
Inbuild in length	

Technical Notes Tube/Shaft Page 7 Bearing Type Page 14 General Information Page 5

Type 150 / 151

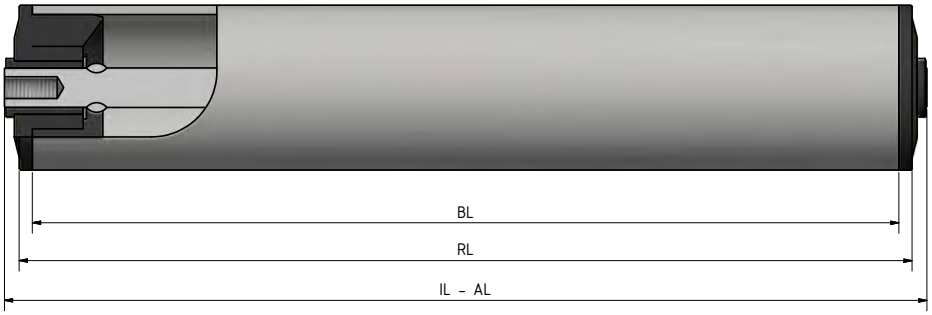

Shaft dimensions

Order Specification		A...UD...		A...ID...		A...Glad		A...SW...		A...VA...	
Shaft Ø	IL=	S	K	S	K	S	K	S	K	S	K
8	RL+	19	23			6	10			6	10
10	RL+	18	22	6	10	6	10	6	10	6	10
12	RL+	20	24	6	10	6	10	6	10	6	10
14	RL+	22	26	6	10	6	10	6	10	6	10

S = Steel tube K = Plastic tube

Tube- and Shaft Combination

Tube Ø	A8	A10	A 12	A 14
50 x 1,5	x	x	x	x
50 x 2,8 KB/KGH	x	x	x	x
60 x 2	x	x	x	x
60,3 x 1,65	x	x	x	x
63 x 3 KB/KGH	x	x	x	x

Optional	Coatings Page 10	Shaft caps Page 13

Type 150

Bearing Type	**Thermoplastic synthetic material**
Bearing	Slide bearing bushes
Load Capacity	150 N (depending upon the load limit of tube and shaft)
Maximum Speed	0,3 m/s
Range of Temperature	-5 ° to +40 °C
Optional	
Note	Gravity Roller - not for use as driven roller. For tube dimension.

Type 151 (Special design)

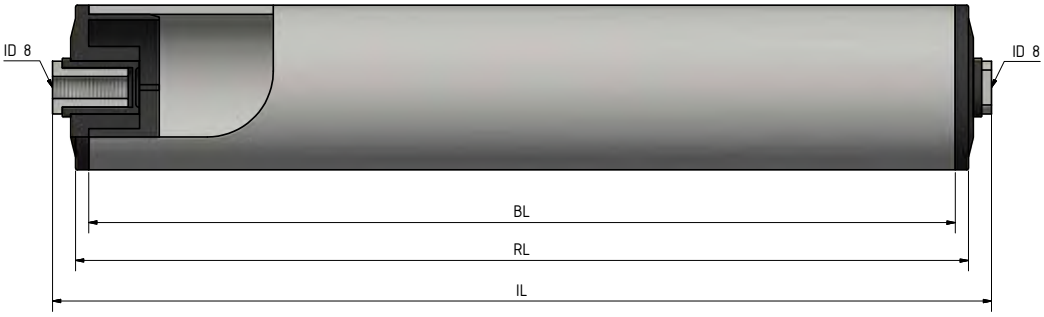

Note:	Gravity roller - not to be used as driven roller. Closed plain bearing bush prevents infiltration of water

Order Example

Type 150	**150 - 50x2,8 KB A10 VA IL=500 mm**
Type 151	**151 - 50x2,8 KB A12 ID 8 IL=500 mm**

Bearing Type
Tube Ø and wall thickness
Tube material
Shaft Ø
Inbuild in option
Inbuild in length

Type 190

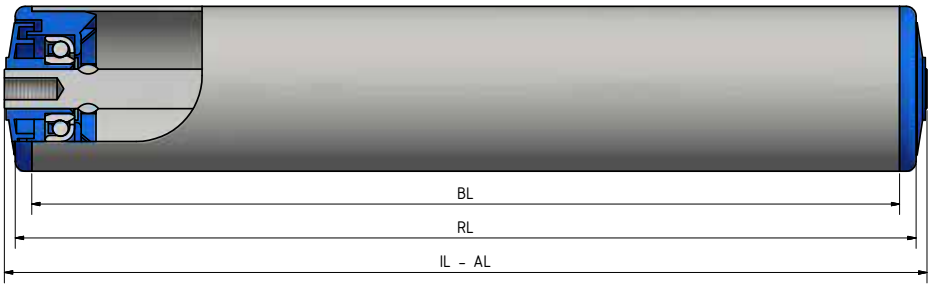

Shaft dimensions

Order Specification		A...UD...	A...ID...	A...Glad	A...SW...	A...VA...
Shaft Ø	IL=					
10	RL+	18	7	6	7	6
AZ11	RL+	20	7	6	7	6
12	RL+	22	7	6	7	6
14	RL+	22	7	6	7	6

Tube- and Shaft Combination

Tube Ø	A10	AZ11	A12	A 14
50 x 1,5	x	x	x	x
50 x 2	x	x	x	x
60 x 2	x	x	x	x
50 x 2,8 KB/KGH	x	x	x	x
63 x 3 KB/KGH	x	x	x	x

Optional	Coatings Page 10

Type 190

Bearing Type	**Thermoplastic synthetic material**
Bearing	Steel tapered roller bearings and single labyrinth.
Load capacity	250 N (depending on the load between shaft and tube).
Maximum Speed	0,5 m/s
Range of Temperature	-5 ° to +40 °C
Optional	Type 190R (ball made of stainless steel 1.4301/1.4401).
Note	Slow moving belt installations and gravity conveyors where sealing is required. For example, in the agriculture or farming sector.

Order Example

Type	**190 - 50x2,8 KB A8 VA IL=500 mm**
Bearing Type	190
Tube Ø and wall thickness	50x2,8
Tube material	KB
Shaft Ø	A8
Inbuild in option	VA
Inbuild in length	IL=500 mm

Technical Notes Tube/Shaft Page 7 Bearing Type Page 14 General Information Page 5

Type 200

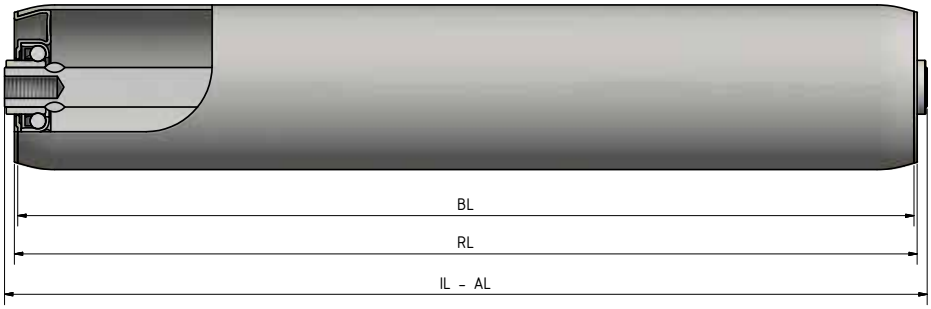

Shaft dimensions

Order Specification		A...UD...	A...ID...	A...Glad	A...SW...	A...VA...
Shaft Ø	IL=					
6	RL+	16		6		6
8	RL+	19		6		6
10	RL+	18	6	6	6	6
AZ11	RL+			6		6
12	RL+	20	6	6	6	6

Tube- and Shaft Combination

Tube Ø	A6	A8	A10	AZ11	A 12
30 x 1,5	x	x	x		
40 x 1,5		x	x	x	x
50 x 1,5	x	x	x	x	x
50 x 2		x	x	x	x
60 x 2		x	x	x	x
80 x 2			x	x	x

Optional	Coatings Page 10	Shaft caps Page 13

Type 200

Bearing Type	**Steel Housing**
Bearing	Ball Row
Load Capacity	1.600 N (depending upon the load limit of tube and shaft)
Maximum Speed	0,6 m/s
Range of Temperature	-5 ° to +80 °C
Optional	With special greasing even for use in Deep Freeze Areas (-28°C)
Note	Gravity Roller - not for use as driven roller.

Order Example

Type	**200 - 50x1,5 STV A12 ID 8x15 IL=500 mm**
Bearing Type	
Tube Ø and wall thickness	
Tube material	
Shaft Ø	
Inbuild in option	
Inbuild in length	

Technical Notes Tube/Shaft Page 7 Bearing Type Page 14 General Information Page 5

Type 220

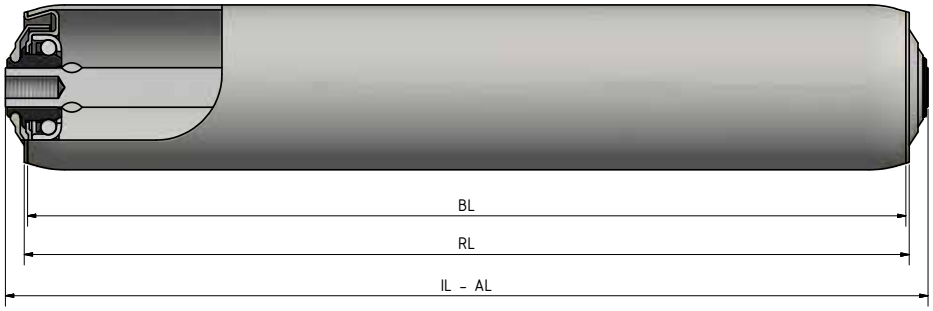

Shaft dimensions

Order Specification		A...UD...	A...VjM...	A...ID...	A...Glad	A...SW...	A...VA...
Shaft Ø	IL=						
10	RL+	22	10	10	10	10	10
12	RL+	24	10	10	10	10	10
15	RL+	26	10	10	10		

Tube- and Shaft Combination

Tube Ø	A10	A12	A15
50 x 1,5	x	x	x
50 x 2	x	x	x
60 x 2	x	x	x
80 x 2	x	x	x

Optional	Coatings Page 10	Shaft caps Page 13

Type 220

Bearing Type	**Steel Housing**
Bearing	Ball Row
Load Capacity	2.400 N (depending upon the load limit of tube and shaft)
Maximum Speed	0,8 m/s
Range of Temperature	-5 ° to +80 °C
Optional	With special greasing even for use in Deep Freeze Areas (-28°C)
Note	Gravity Roller - not for use as driven roller.

Order Example

Type	**220 - 50x1,5 STV A12 ID 8x15 IL=500 mm**
Bearing Type	220
Tube Ø and wall thickness	50x1,5
Tube Material	STV
Shaft Ø	A12
Inbuild in option	ID 8x15
Inbuild in length	IL=500 mm

Technical Notes Tube/Shaft Page 7 Bearing Holder Page 14 General Information Page 5

Type 250 / 251

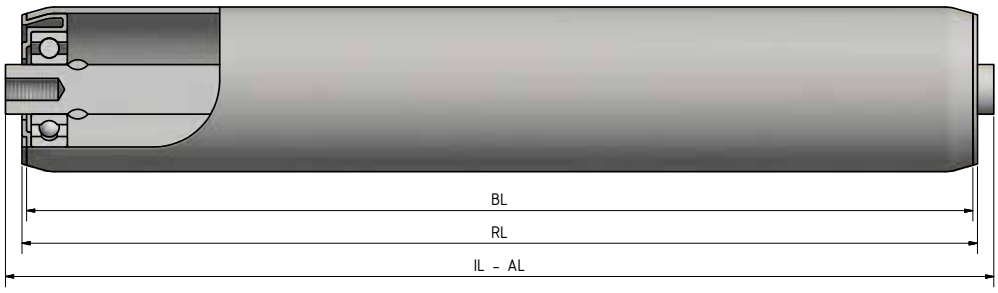

Shaft dimensions

Order Specification		A...UD...	A...VjM...	A...ID...	A...Glad	A...SW...	A...VA...
Shaft Ø	IL=						
8	RL+	23			10		10
10	RL+	22	10	10	10	10	10
AZ11	RL+				10		10
12	RL+	24	10	10	10	10	10
14	RL+	26	10	10	10	10	10
15	RL+		10	10		10	
17	RL+	26		10		10	

Tube- and Shaft Combination

Tube Ø	A8	A10	AZ11	A12	A14	A15	A17
40 x 1,5				x			
50 x 1,5	x	x	x	x	x	x	x
50 x 2	x	x	x	x	x	x	x
60 x 2	x	x	x	x	x	x	x
60 x 3		x	x	x	x	x	x
80 x 2				x	x	x	x
80 x 3				x	x	x	x

Optional	Groove for belt drive Page 52	Coatings Page 10	Shaft caps Page 13

Type 250 / 251

Bearing Type	**Steel Housing**
Bearing	Ball Bearings (Series 6001,6003,6202) DIN 625 available in 2 RS, ZZ - plastic distance bushings to get the shaft diameters.
Load Capacity	2.400 N (depending upon the load limit of tube and shaft)
Maximum Speed	1,2 m/s
Range of Temperature	-5 ° to +60 °C
Optional	Type 251 with additional Cap
Note	Tube Ø 40 mm only with Shaft diameter 12 mm (Ending flat and Spring loaded not available). Shaft diameter 15 mm und 17 mm without distance bush. Type 251 for shaft 17 mm not available. With special greasing even for use in Deep Freeze Areas (-28°C).

Order Example

Type	**250 RS - 50x1,5 STV A12 ID 8x15 IL=500 mm**
Bearing Type	
Ball bearing sealing	
Tube Ø and wall thickness	
Tube material	
Shaft Ø	
Inbuild in option	
Inbuild in length	

Technical Notes Tube/Shaft Page 7 Bearing Holder Page 14 General Information Page 5

Type 255

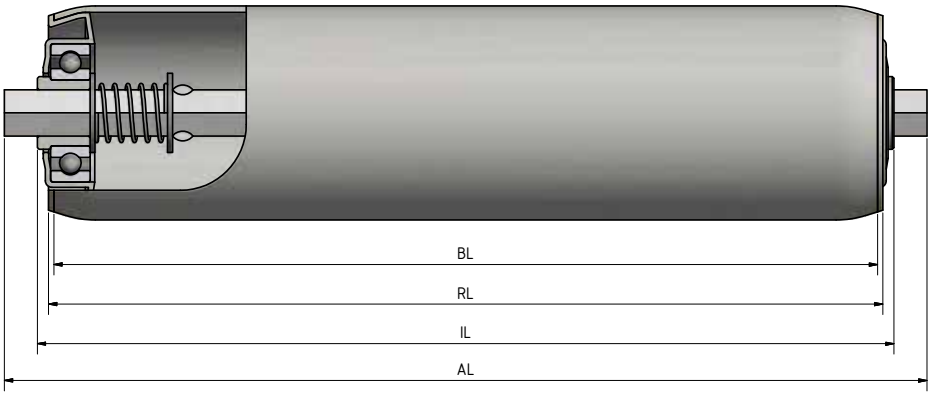

Shaft dimensions

Order Specification		A...UD...	A...VJ...	A...ID...	A...Glad	A...SW...	A...VA...
Shaft Ø	IL=						
AZ11	RL+			7		6	6
12	RL+			7		6	6
AZ14	RL+			6		6	5
17	RL+			7		6	6
AZ17	RL+			7		6	6
20	RL+			10		10	10

Tube- and Shaft Combination

Tube Ø	AZ11	A12	AZ14	A17	AZ17	A20
63,5 x 2,9	x	x	x	x	x	x
80 x 3			x			x
88,9 x 2,9						x

Optional

Type 255

Bearing Type	**Steel bearing**
Bearing	Precision ball bearing (6001, 6003, 6004, 6005, 6202, 6204 series) according to DIN625. Available in 2 RS, ZZ, possibly with spacers for each axle diameter as defined in axle combinations.
Load capacity	2400 N (depending on the load between shaft and tube).
Maximum speed	1,2 m/s
Range of Temperature	-5 ° to +60 °C
Note	Cargo rollers, suitable for heavy pallet transport. These rollers are also well suited for side loading. This type of conveyor roller is widely used in air cargo handling.

Order Example

Type	**255 RS 88,9x2,9 STV A20 VA IL=500 mm**
Bearing Type	255
Ball bearing sealing	RS
Tube Ø and wall thickness	88,9x2,9
Tube material	STV
Shaft Ø	A20
Inbuild in option	VA
Inbuild in length	IL=500 mm

Technical Notes Tube/Shaft Page 7 Bearing Holder Page 14 General Information Page 5

Type 260 / 261

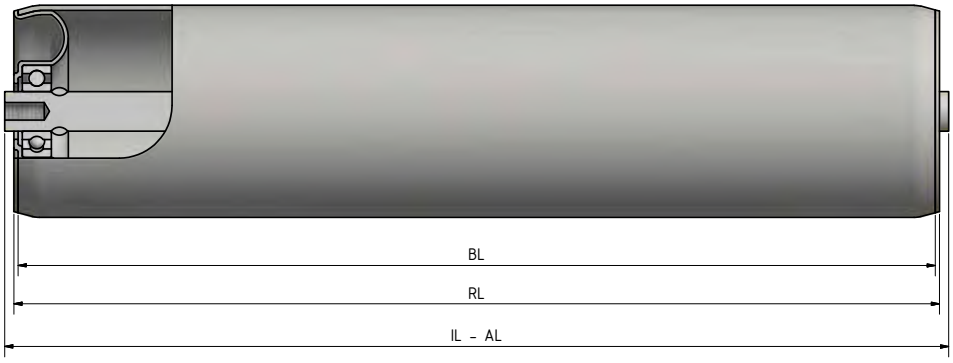

Shaft dimensions

Order Specification		A...UD...	A...ID...	A...SW...
Shaft Ø	IL=			
17	RL+	22	6	6
20	RL+	24	6	6
25	RL+		6	6

Tube- and Shaft Combination

Tube Ø	A17	A20	A25
63,5 x 2,9		x	
70 x 2,9	x	x	
80 x 2	x	x	x
88,9 x 2,9	x	x	x
108 x 3,25		x	x

Optional	Groove for belt drive Page 52	Coatings Page 10	Shaft caps Page 13	Buffer rings Page 251

Type 260 / 261

Bearing Type	**Steel housing**
Bearing	Ball Bearing (Series 6004, 6005, 6204, 6303) DIN 625 available in 2 RS, ZZ
Load Capacity	5.000 N (depending upon the load limit of tube and shaft).
Maximum Speed	1,2 m/s
Range of Temperature	-5 ° to +60 °C
Optional	Type 261 with additional sealing
Note	For use as driven roller. Tube Ø 63,5 mm only available with shaft diameter 20 mm.
	With special greasing even for use in Deep Freeze Areas (-28°C).

Order Example

Type	**260 RS - 88,9x2,9 STV A20 ID 12x20 IL=950 mm**
Bearing Type	260
Ball bearing sealing	RS
Tube Ø and wall thickness	88,9x2,9
Tube material	STV
Shaft Ø	A20
Inbuild in option	ID 12x20
Inbuild in length	IL=950 mm

Technical Notes Tube/Shaft Page 7 Bearing Holder Page 14 General Information Page 5

Type 290

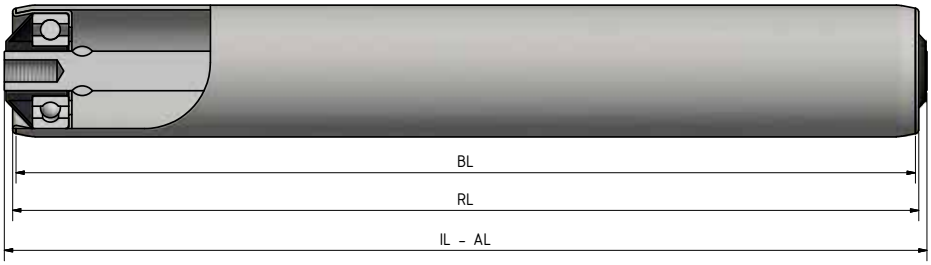

Shaft dimensions

Order Specifications		A...UD...	A...VjM...	A...ID...	A...Glad	A...SW...	A...VA...
Shaft Ø	IL=						
8	RL+				10		10
10	RL+	22	10	10	10	10	10
AZ11	RL+				10		10
12	RL+	24	10	10	10	10	10
14	RL+	26	10	10	10	10	10
15	RL+		10	10		10	

Tube- and Shaft Combination

Tube Ø	A8	A10	AZ11	A12	A14	A15
40 x 1,5	x	x	x	x	x	x

Optional	Groove for belt drive Page 52	Coatings Page 10	Shaft caps Page 13

Type 290

Bearing Type	**Steel housing**
Bearing	Ball Bearing (Series 6202) acc. DIN 625. Available in 2 RS, ZZ. Possibly with plastic distance bushings to get the shaft diameters.
Load Capacity	1.200 N (depending upon the load limit of tube and shaft)
Maximum Speed	1,2 m/s
Range of Temperature	-5 ° to +60 °C
Optional	
Note	For use as driven roller. With special greasing even for use in Deep Freeze Areas (-28°C).

Order Example

Type	**290 RS - 40x1,5 STV A12 ID 8x15 IL=500 mm**
Bearing Type	
Ball bearing sealing	
Tube Ø and wall thickness	
Tube materiaal	
Shaft Ø	
Inbuild in option	
Inbuild in length	

Type 300

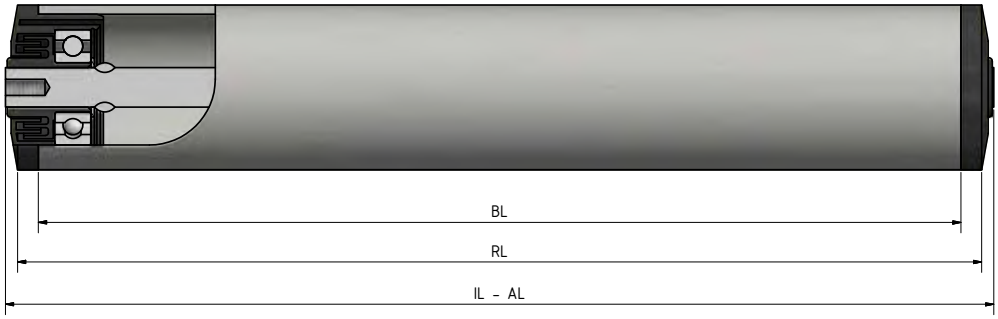

Shaft dimensions

Order Specification		A...UD...	A...VjM...	A...ID...	A...Glad	A...SW...	A...VA...
Shaft Ø	IL=						
8	RL+	23			10		10
10	RL+	22	10	10	10	10	10
AZ11	RL+				10		10
12	RL+	24	10	10	10	10	10
14	RL+	26	10	10	10	10	10

Tube- and Shaft Combination

Tube Ø	A8	A10	AZ11	A12	A14
50 x 1,5	x	x	x	x	x
50 x 2,8 KB/KGH	x	x	x	x	x
60 x 2	x	x	x	x	x
60,3 x 1,65	x	x	x	x	x
63 x 3 KB/KGH	x	x	x	x	x
70 x 2		x	x	x	x
80 x 2		x	x	x	x
88,9 x 2,9		x	x	x	x
90 x 7 KB/KGH		x	x	x	x

Optional	Groove for belt drive Page 52	Coatings Page 10	Shaft caps Page 13

Type 300

Bearing Type	**Thermoplastic synthetic material**
Bearing	Ball Bearing (Series 6202) DIN 625 available in 2 RS, ZZ.
Load Capacity	1.600 N (depending upon the load limit of tube and shaft)
Maximum Speed	2 m/s
Range of Temperature	-5 ° to +50 °C
Optional	
Note	For use as driven roller.

Order Example

Type	**300 RS - 50x1,5 STV A12 ID 8x15 IL=500 mm**
Bearing Type	
Ball bearing sealing	
Tube Ø and wall thickness	
Tube material	
Shaft Ø	
Inbuild in option	
Inbuild in length	

Technical Notes Tube/Shaft Page 7 Bearing Holder Page 14 General Information Page 5

Type 301

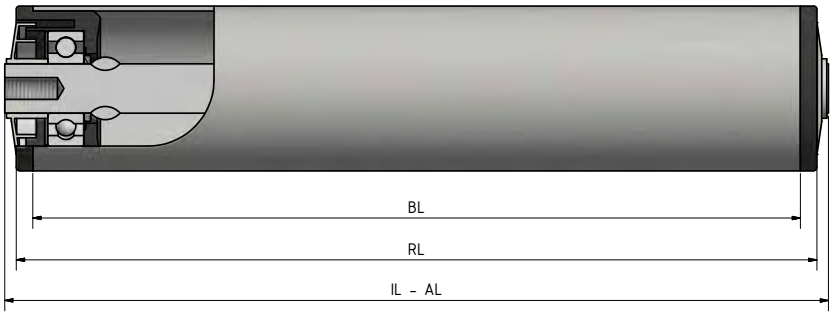

Shaft dimensions

Order Specification		A...UD...	A...VjM...	A...ID...	A...Glad	A...SW...
Shaft Ø	IL=					
8	RL+	19	6	6	6	6
10	RL+	19	7	7	7	7
12	RL+	21	7	7	7	7
14	RL+	23	7	7	7	7
15	RL+	23	7	7	7	7
17	RL+	21	5	5	5	5

Tube- and Shaft Combination

Tube Ø	A8	A10	A12	A14	A15	A17
50 x 1,5	x	x	x	x	x	x
50 x 2,8 KB/KGH	x	x	x	x	x	x
60 x 2	x	x	x	x	x	x
60,3 x 1,65	x	x	x	x	x	x
63 x 3 KB/KGH	x	x	x	x	x	x
70 x 2		x	x	x	x	x
80 x 2		x	x	x	x	x
88,9 x 2,9		x	x	x	x	x

Optional	Groove for belt drive Page 52	Coatings Page 10	Shaft caps Page 13

Type 301

Bearing Type	**Thermoplastic synthetic material**
Bearing	Ball Bearing (Series 6202, 6003) DIN 625 available in 2RS, Z and ZZ.
Load Capacity	1.600 N (depending upon the load limit of tube and shaft)
Maximum Speed	2 m/s
Range of Temperature	-5 ° to +50 °C
Optional	Anti-static
Note	For use as driven roller.

Order Example

Type	**301 RS - 50x1,5 STV A14 ID 8x15 IL=500 mm**
Bearing Type	
Ball bearing sealing	
Tube Ø and wall thickness	
Tube material	
Shaft Ø	
Inbuild in option	
Inbuild in length	

Type 302

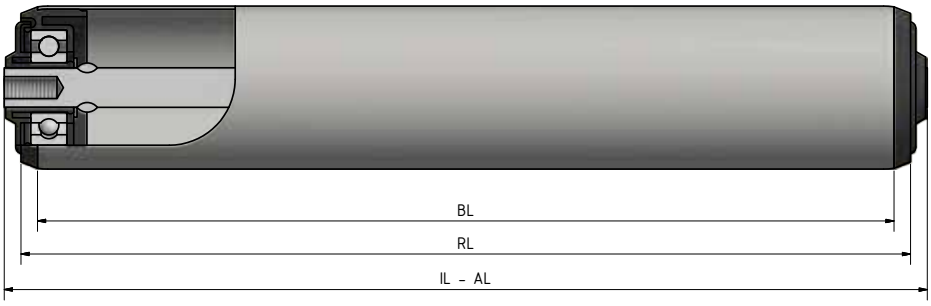

Shaft dimensions

Order Specification		A...UD...	A...VjM...	A...ID...	A...Glad	A...SW...	A...VA...
Shaft Ø	IL=						
8	RL+	23	10	10	10	10	10
10	RL+	22	10	10	10	10	10
AZ11	RL+				10		10
12	RL+	24	10	10	10	10	10
14	RL+	26	10	10	10	10	10
15	RL+	26	10	10	10	10	

Tube- and Shaft Combination

Tube Ø	A8	A10	AZ11	A12	A14	A15
40 x 1,5			x	x		
50 x 1,5	x	x	x	x	x	x
60 x 2	x	x	x	x	x	x

Optional	Groove for belt drive Page 52	Coatings Page 10	Shaft caps Page 13

Type 302

Bearing Type	**Thermoplastic synthetic material**
Bearing	Ball Bearing (Series 6202) DIN 625 available in 2RS, ZZ. Possibly with plastic distance bushings to get the shaft diameters.
Load Capacity	1.600 N (depending upon the load limit of tube and shaft).
Maximum Speed	2 m/s
Range of Temperature	-5 ° to +50 °C
Optional	
Note	For use as driven roller. Anti-static Version.

Roller 302-50x1,5 STV AZK 8 ZK 11x12 VA

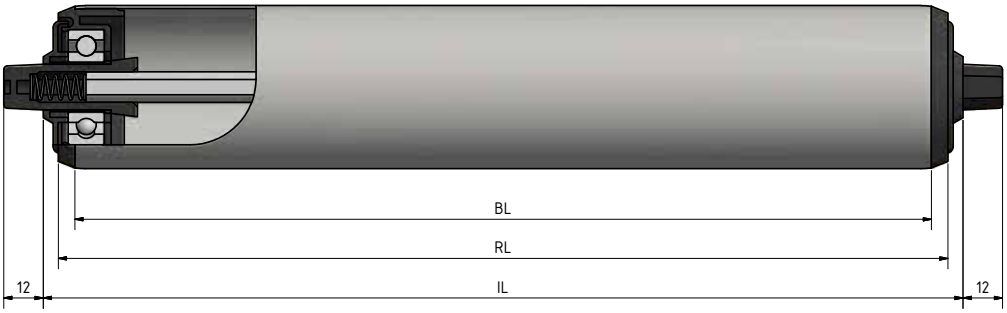

Note:
Roller equipped with conical hexagonal adapters on both ends which can be pressed in. Load Capacity 400 N.

For 302-40x1,5 STI AZK 8 SK 11x12 VA the excess length of the spring-loaded hexagonal shaft is 14 mm on both sides.

Order Example 302-50x1,5 STV AZK 8 ZK 11x12 VA

Type	**302 RS - 50x1,5 STV AZ8 ZK 11x12 VA IL=500 mm**
Bearing Type	
Ball bearing sealing	
Tube Ø and wall thickness	
Tube material	
Shaft Ø	
Inbuild in option	
Inbuild in length	

Order Example 302

Type	**302 RS - 50x1,5 STV AZ11 VA IL=500 mm**
Bearing Type	
Ball bearing sealing	
Tube Ø and wall thickness	
Tube material	
Shaft Ø	
Inbuild in option	
Inbuild in length	

Technical Notes Tube/Shaft Page 7 Bearing Holder Page 14 General Information Page 5

Type 306 / 307 / 308 / 309

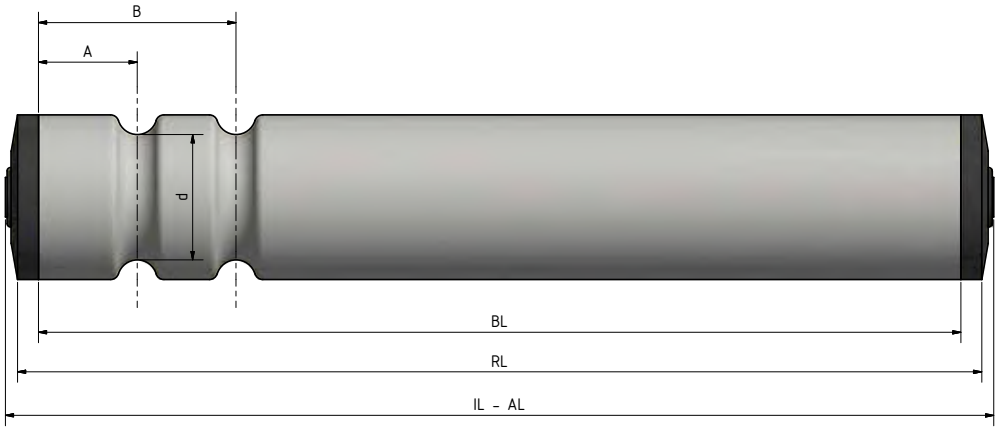

Steel tube

Belt-Ø	4	4	5	6	6	6	6	8	8
Tube Ø	30x1	40x1,5	48x1,5	50x1,5	60x2	63,5x2,9	80x3	88,9x2,9	108x3,25
A min	30	30	30	30	35	35	35	35	35
(B-A) min	30	30	30	30	35	35	35	35	35
d min	22	32	38	38	48	51	68	73	92

Plastic tube

Belt-Ø	4	4	5	5
Tube Ø	30x1,8	40x2,3	50x2,8	63x3
A min	35	35	30	35
(B-A) min	30	30	30	35
d min	22	32	40	53

The following roller types can be used as grooved rollers.

Optional

Type 306 / 307 / 308 / 309

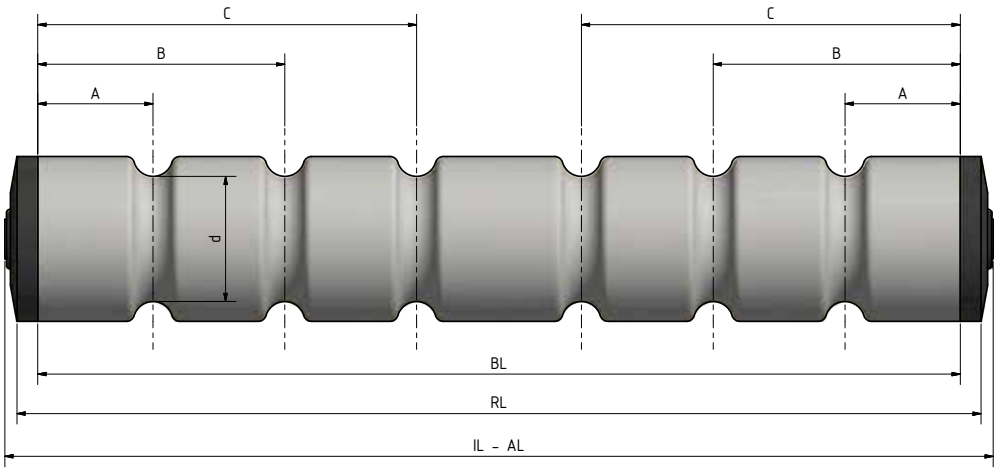

Note: Type 306 available with more grooves spread over the length. Minimum distance between grooves 30 mm.

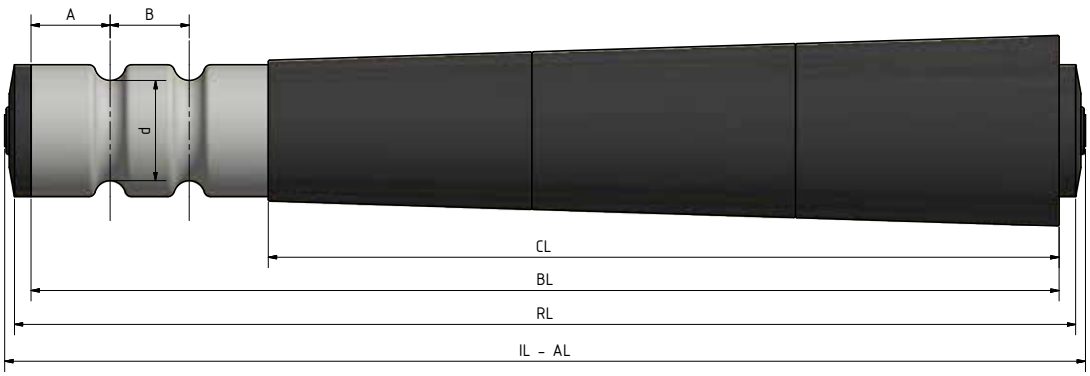

Accessories: Round belt wheel

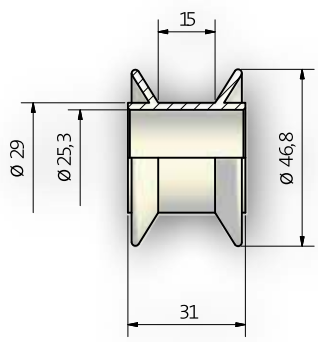

Shaft 25

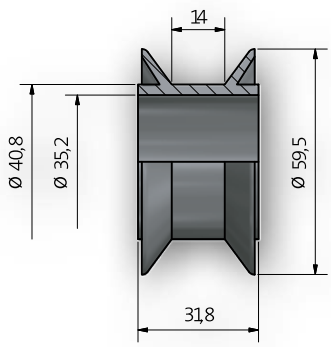

Shaft 25

Order extension to be placed in front of roller type:

306 = 1 groove

307 = 2 grooves

308 = 3 grooves

309 = 4 grooves

Type 310

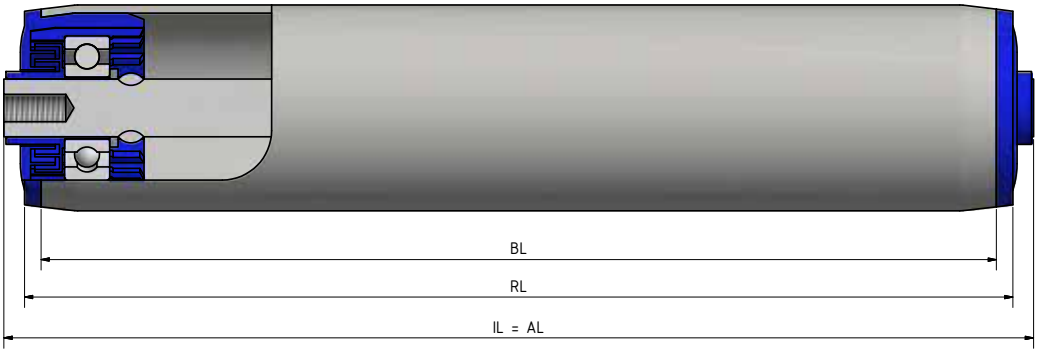

Shaft dimensions

Order Specification		A...UD...	A...VJ...	A...ID...	A...Glad	A...SW...	A...VA...
Shaft Ø	IL=					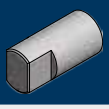	
AZ11	RL+	10	10	10	10	10	10
12	RL+	10	10	10	10	10	10
14	RL+	10	10	10	10	10	10

Tube- and Shaft Combination

Tube Ø	AZ11	A12	A14
50 x 1,5	x	x	x

Optional

Type 310

Bearing Type	**Thermoplastic synthetic material**
Bearing	Precision ball bearing (6202 series) according to DIN625. Available in 2RS, ZZ.
Load Capacity	2400 N (depending on the load between shaft and tube).
Maximum Speed	1,2 m/s
Range of Temperature	-5 ° to +60 °C
Optional	
Note	This roller type is ideally suited as a belt roller. The combination of small diameter and high load capacity are also important features of this bearing element. Advantages: - silent - light starting torque - can be used in damp environments - optional: anti-static

Order Example

Type	**310 - 50x1,5 RS STV A14 ID 8x15 IL=500 mm**
Bearing Type	
Tube Ø and wall thickness	
Ball bearing sealing	
Tube material	
Shaft Ø	
Inbuild in option	
Inbuild in length	

Type 320

Type 320-40 KS

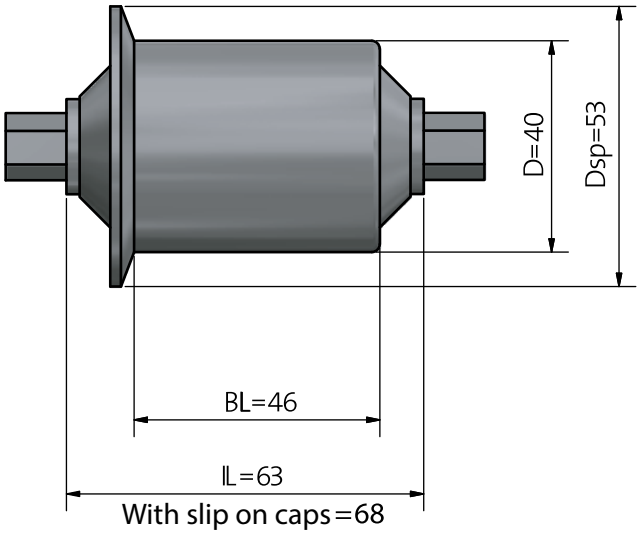

Type 320-50 KS

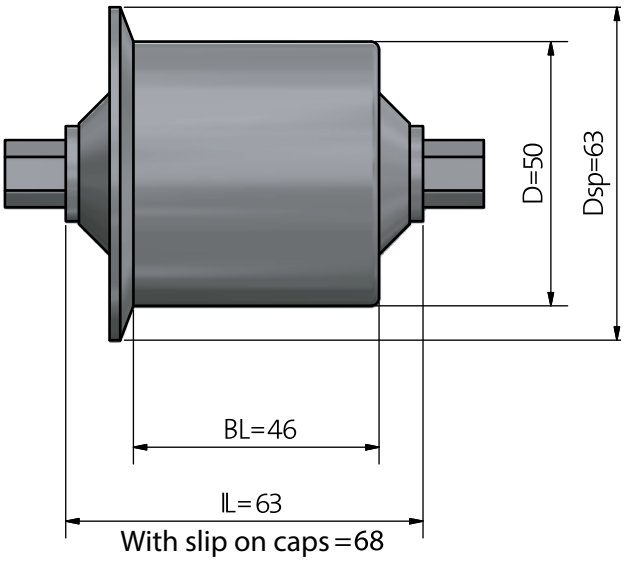

Shaft dimensions

Order Specification		A...ID...	A...Glad	A...SW...
Shaft Ø	IL=			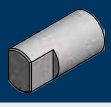
8	RL+	17	17	17
10	RL+	17	17	17
AZ11	RL+		17	
12	RL+	17	17	17
14	RL+	17	17	17

Optional Shaft caps Page 13

Type 320

Bearing Type	**Thermoplastic synthetic material**
Bearing	Ball Bearing (Series 6202) acc. DIN 625 available in 2RS, ZZ. Possibly with plastic distance bushings to get the shaft diameters.
Load Capacity	600 N (depending upon the load limit of tube and shaft)
Maximum Speed	1,2 m/s
Range of Temperature	-5 ° to +50 °C
Optional	
Note	For use as guide roller for Flat Belts.

Type 350

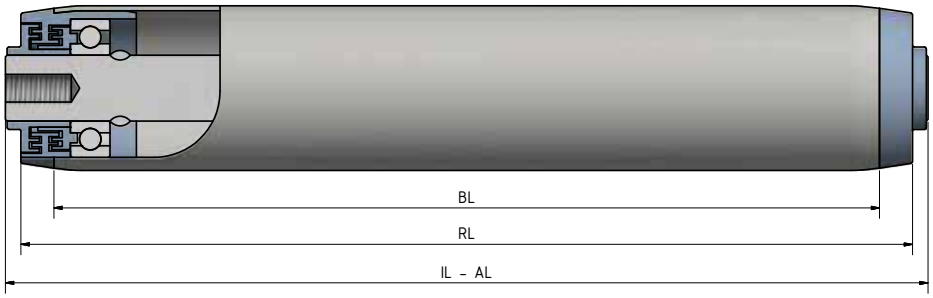

Shaft dimensions

Order Specification		A...UD...	A...VJ...	A...ID...	A...Glad	A...SW...	A...VA...
Shaft Ø	IL=					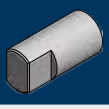	
15	RL+	23	7	7	6	7	
20	RL+	34	13	13	12	13	

Tube- and Shaft Combination

Tube Ø	A15	A20
50 x 1,5	x	
50 x 2		x

Optional

Type 350

Bearing Type	**Thermoplastic synthetic material**
Bearing	Precision ball bearing (serie 6202Z or 6004Z) according to DIN 625.
Load Capacity	2400 N (depending on the load between shaft and tube).
Maximum Speed	1,2 m/s
Range of Temperature	-5 ° to +60 °C
Note	With an E-seal; this is an excellent 5-fold labyrinth seal and is unique because of the seal on the shaft, by means of a special construction of the bearing housing. This roller is also very smooth-running because of a special provision in the groove ball bearing. Thanks to its good sealing and grooved ball bearings, it is suitable as a belt roller and driven roller in difficult operating conditions. Because of the smooth running of the roller, this roller is also suitable for light conveyor belts and for all types of trough sets.

Order Example

Type	**350Z 50x1,5 STV A15 ID 8x15 IL=500 mm**
Bearing Type	350
Ball bearing sealing	Z
Tube Ø and wall thickness	50x1,5
Tube material	STV
Shaft Ø	A15
Inbuild in option	ID 8x15
Inbuild in length	IL=500 mm

Technical Notes Tube/Shaft Page 7 Bearing Holder Page 14 General Information Page 5

Type 360

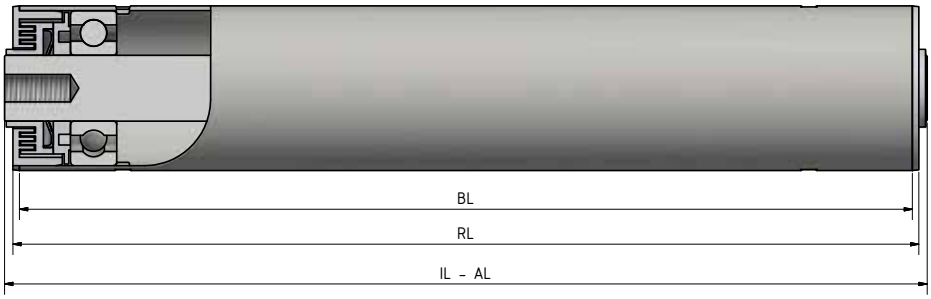

Shaft dimensions

Order Specification		A...UD...	A...VJ...	A...ID...	A...Glad...	A...SW...	A...VA...
Shaft Ø	IL=						
20	RL+	27	6	6	5	6	

Tube- and Shaft Combination

Tube Ø	A20
60 X 2	x
70 x 2	x
88,9 x 2,9	x
108 x 3,2	x
63 x 3 KB/KGH	x

Optional	Coatings Page 10

Type 360

Bearing Type	**Thermoplastic synthetic material**
Bearing	Precision ball bearing (6204 series) according to DIN 625. Available in 2RS, ZZ.
Load Capacity	2400 N (depending on the load between shaft and tube).
Maximum Speed	0,5 m/s
Range of Temperature	-5 ° to +60 °C
Optional	AV ring or RB ring
Note	This type of conveyor roller is intended for heavy transport. Thanks to the 3-fold grease-filled labyrinth seal, this roller can also be used in damp or dusty environments.

Order Example

Type	**360RS - 60x2 TV A20 ID8x15 IL=500 mm**
Bearing Type	360
Ball bearing sealing	RS
Tube Ø and wall thickness	60x2
Tube material	TV
Shaft Ø	A20
Inbuild in option	ID8x15
Inbuild in length	IL=500 mm

Technical Notes Tube/Shaft Page 7 Bearing Holder Page 14 General Information Page 5

Type 380

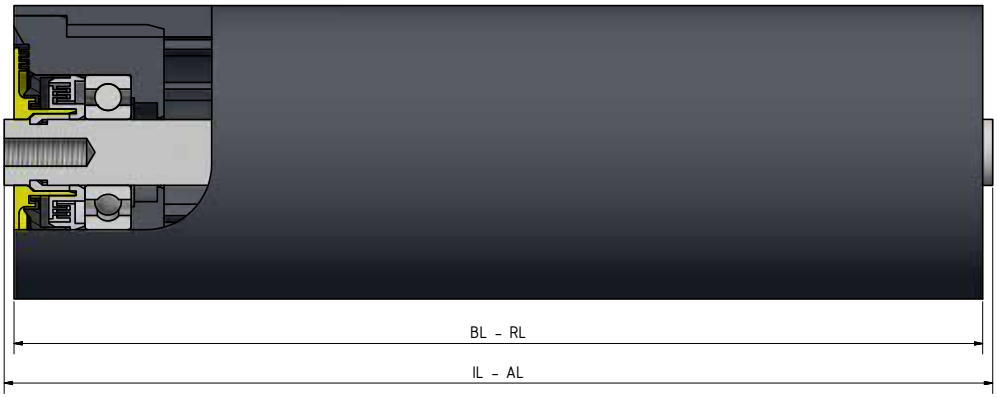

Shaft dimensions

Order Specification		A...UD...	A...VJ...	A...ID...	A...Glad...	A...SW...	A...VA...
Shaft Ø	IL=					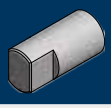	
20	RL+			12		12	

Tube- and Shaft Combination

Tube Ø	A20
88,9 x 6,25 HDPE	x
108 x 7,3 HDPE	x

Optional

Type 380

Bearing type	**Thermoplastic synthetic material**
Bearing	Precision ball bearing (6204 series) according to DIN625. Available in 2RS, ZZ.
Load Capacity	2000 N (depending on the load between shaft and tube).
Maximum Speed	1,5 m/s
Range of Temperature	-5 ° to +60 °C
Note	This is a black HDPE plastic roller with a 5-fold grease-filled labyrinth seal.

Advantages:

- high tensile strength and impact resistance
- suitable for the food industry (FDA)
- rustproof
- slightly anti-static
- 20–50% lighter than steel rollers
- noiseless and pendulum-free
- water and dust resistant
- longer life
- energy-saving through low inertia

Applications:

- Chemical industry: fertilizers, salt, sugar, paper pulp, and alkaline acids.
- Bulk industry, for example for cement, concrete, or limestone.

Order Example

Type	**380RS - 88,9x6,3 HDPE A20 ID10x20 IL=500 mm**
Bearing Type	
Ball bearing sealing	
Tube Ø and wall thickness	
Tube material	
Shaft Ø	
Inbuild in option	
Inbuild in length	

Type 400

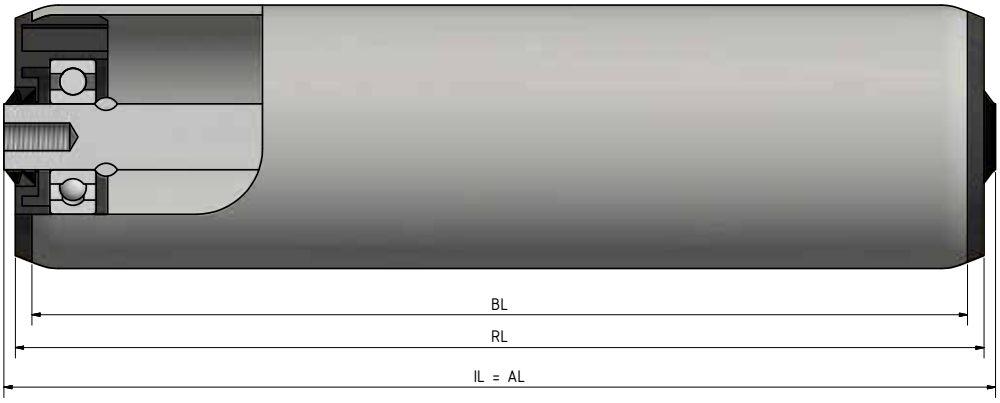

Shaft dimensions

Order Specification		A...UD...	A...VjM...	A...ID...	A...SW...
Shaft Ø	IL=				
20	RL+	24	6	6	6
25	RL+		6	6	6

Tube- and Shaft Combination

Tube Ø	A20	A25
50 x 2	x	
60 x 2	x	
63,5 x 2,9	x	
80 x 2	x	
80 x 3	x	
88,9 x 2,9	x	x
108 x 3,25	x	x
133 x 3,6	x	x

Optional	Groove for belt drive Page 52	Coatings Page 10	Shaft caps Page 13	Back up/Buffer rings Page 251

Type 400

Bearing Type	**Thermoplastic synthetic material**
Bearing	Ball Bearing (Series 6004, 6005, 6204, 6205) DIN 625 available in 2RS, ZZ - additional protection with a V-Ring.
Load Capicity	3.600 N (depending upon the load limit of tube and shaft)
Maximum Speed	1,2 m/s
Range of Temperature	-5 ° to +60 °C
Optional	
Note	For use as Belt Conveyor Roller.

Order Example

Type	**400 RS - 88,9x2,9 STV A20 SW 15x10 IL=950 mm**
Bearing Type	
Ball bearing sealing	
Tube Ø and wall thickness	
Tube material	
Shaft Ø	
Inbuild in option	
Inbuild in length	

Type 400 CC

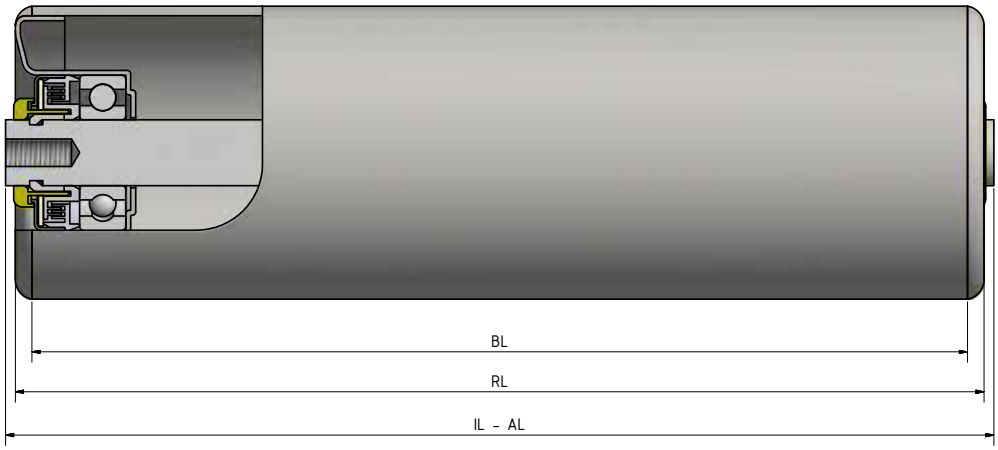

Shaft dimensions

Order Specification		A...UD...	A...VJ...	A...ID...	A...Glad...	A...SW...	A...VA...
Shaft Ø	IL=						
20	RL+	27	6	6	6	6	

Tube- and Shaft Combination

Tube Ø	A15	A17	A20
50 x 1,5	x		
50 x 2	x		
60 x 2	x	x	
60 x 3	x	x	
63,5 x 2,9		x	x
80 x 2			x
80 x 3			x
88,9 x 2,9			x

Optional	Coatings Page 10	Shaft caps Page 13

Type 400 CC

Bearing Type	**Steel Housing**
Bearing	Precision ball bearing (620ZZ) according to DIN 625.
Load Capacity	2400 N (depending on the load between shaft and tube).
Maximum Speed	1,2 m/s
Range of Temperature	-5 ° to +80 °C
Optional	
Note	This is a roller with a steel welded bearing base with a 3-fold grease-filled labyrinth seal and grooved ball bearing in a unique click system design. These conveyor rollers are ideally suited for heavy transport. For example, for pallet transport and belt support.

Order Example

Type	**400 CC RS - 80x2 STV A20 ID 12x20 IL=950 mm**
Bearing Type	400 CC
Ball bearing sealing	RS
Tube Ø and wall thickness	80x2
Tube material	STV
Shaft Ø	A20
Inbuild in option	ID 12x20
Inbuild in length	IL=950 mm

Technical Notes Tube/Shaft Page 7 Bearing Holder Page 14 General Information Page 5

Type 401

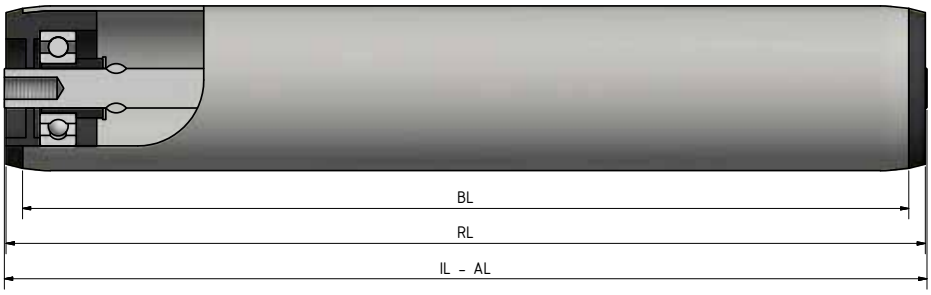

Shaft dimensions

Order Specification		A...UD...	A...ID...	A...SW...
Shaft Ø	IL=			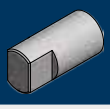
8	RL+	19		
10	RL+	18	6	6
12	RL+	20	6	6
14	RL+	22	6	6
17	RL+	22	6	6

Tube- and Shaft Combination

Tube Ø	A8	A10	A12	A14	A17
40 x 1,5	x	x	x	x	
50 x 2	x	x	x	x	x

Optional	Coatings Page 10	Shaft caps Page 13

Type 401

Bearing Type	**Thermoplastic synthetic material**
Bearing	Ball Bearing (Series 6003, 6202) acc. DIN 625 available in 2RS, ZZ.
Load Capacity	1.600 N (depending upon the load limit of tube and shaft)
Maximum Speed	1,2 m/s
Range of Temperature	-5 ° to +60 °C
Optional	Available with V-Ring

Bestelvoorbeeld

Type	**401 RS - 50x1,5 STV A12 ID 8x15 IL=450 mm**
Bearing Type	
Ball bearing sealing	
Tube Ø and wall thickness	
Tube material	
Shaft Ø	
Inbuild in option	
Inbuild in length	

Type 401 CC

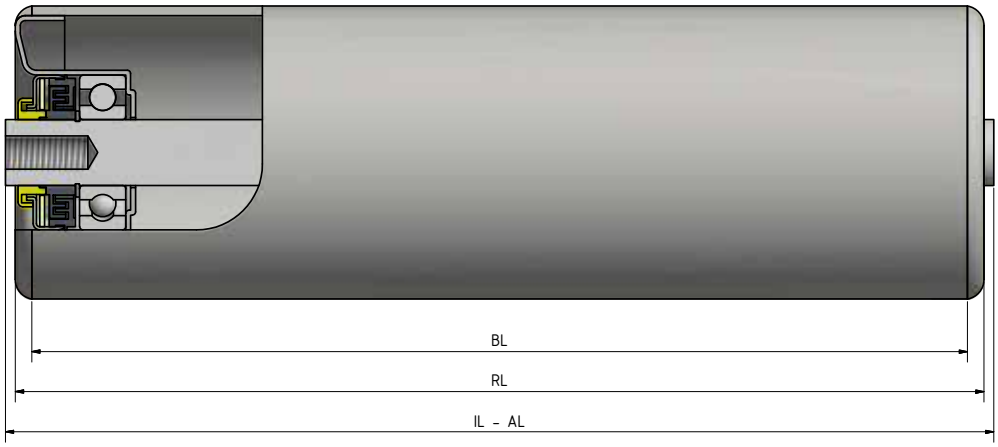

Shaft dimensions

Order Specification		A...UD...	A...VJ...	A...ID...	A...Glad...	A...SW...	A...VA...
Shaft Ø	IL=						
20	RL+	27	6	6	6	6	
25	RL+	32	6	6	6	6	
30	RL+	37	6	6	6	6	

Tube- and Shaft Combination

Tube Ø	A20	A25	A30
63,5 x 2,9	x		
80 x 3	x		
88,9 x 2,9	x	x	
108 x 3,25	x	x	x
133 x 3,6	x	x	x

Optional	Coatings Page 10	Shaft caps Page 13

Type 401 CC

Bearing Type	**Steel Housing**
Bearing	Precision ball bearing (6204, 6005, 6205) according to DIN 625.
Load Capacity	5000 N (depending on the load between shaft and tube).
Maximum Speed	1,2 m/s
Range of Temperature	-5 ° to +80 °C
Optional	
Note	This is a steel welded bearing base with a 3-fold grease filled labyrinth seal and grooved ball bearing in a standard shaft-mounted circlip. These conveyor rollers are ideally suited for heavy transport. For example, for pallet transport and belt support. Also possible in variant **DIN Rollers**. Please inquire about the current quantities in stock.

Order Example

Type	**401 CC RS - 88,9x2,9 STV A20 ID 12x20 IL=950 mm**
Bearing Type	401
Ball bearing sealing	RS
Tube Ø and wall thickness	88,9x2,9
Tube material	STV
Shaft Ø	A20
Inbuild in option	ID 12x20
Inbuild in length	IL=950 mm

Technical Notes Tube/Shaft Page 7 Bearing Holder Page 14 General Information Page 5

Type 402

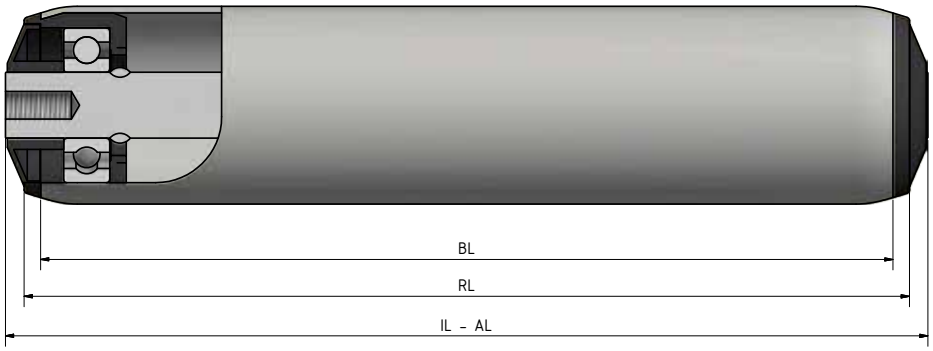

Shaft dimensions

Order Specification		A...UD...	A...ID...	A...Glad	A...SW...
Shaft Ø	IL=				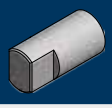
8	RL+	23		10	
10	RL+	22	10	10	10
12	RL+	24	10	10	10
14	RL+	26	10	10	10
17	RL+	26	10	10	10
20	RL+	28	10	10	10

Tube- and Shaft Combination

Tube Ø	A8	A10	A12	A14	A17	A20
40 x 1,5	x	x	x	x		
60 x 2					x	x
63,5 x 2,9					x	x
80 x 2					x	x
88,9 x 2,9					x	x
108 x 3,25					x	x

Optional	Groove for belt drive Page 52	Coatings Page 10	Shaft caps Page 13

Type 402

Bearing Type	**Thermoplastic synthetic material**
Bearing	Ball Bearing (Series 6002, 6204, 6303) DIN 625 available 2RS, ZZ
Load Capacity	3600 N (depending upon the load limit of tube and shaft)
Maximum	1,2 m/s
Rang of Temperature	-5 ° to +60 °C
Optional	
Note	Shaft diameter 8 mm, 10 mm, 12 mm, and 14 mm only available for Tube Ø 40 mm. Load capacity for Tube Ø 40 mm maximum of 800 N / Roller. Cover caps for Tube Ø 60 mm or higher.

Order Example

Type	**402 RS - 88,9x2,9 STV A20 ID 12x20 IL=950 mm**
Bearing Type	402
Ball bearing sealing	RS
Tube Ø and wall thickness	88,9x2,9
Tube material	STV
Shaft Ø	A20
Inbuild in option	ID 12x20
Inbuild in length	IL=950 mm

Technical Notes Tube/Shaft Page 7 Bearing Holder Page 14 General Information Page 5

Type 402 K

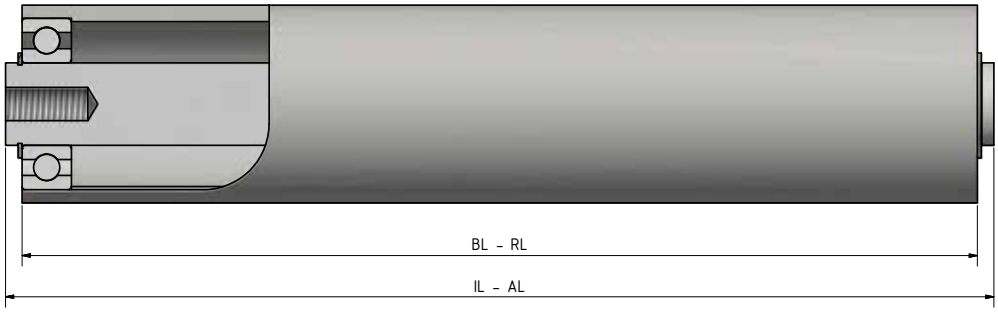

Shaft dimensions

Order Specification		A...VjM...	A...ID...	A...SW...
Shaft Ø	IL=			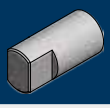
15	RL+	10	10	10
17	RL+	10	10	10
20	RL+	10	10	10

Tube- and Shaft Combination

Tube Ø	A15	A17	A20
40 x 3	x	x	
50 x 3		x	x

Optional	Coatings Page 10

Type 402 K

Bearing Type	**Ball Bearing straight connected in the tube with Precision Ball Bearing**
Bearing	Ball Bearing (Series 6003, 6202, 6204) DIN 625 available in 2RS, ZZ
Load Capacity	Depending upon the load limit of tube and shaft.
Maximum Speed	1,2 m/s
Range of Temperature	-5 ° to +80 °C
Optional	
Note	With special greasing even for use in Deep Freeze Areas (-28°C). Ball Bearing secured with Seeger rings on the shaft.

Order Example

Type	**402 K RS - 50x3 STV A17 ID 12x20 IL=950 mm**
Bearing Type	
Ball bearing sealing	
Tube Ø and wall thickness	
Tube material	
Shaft Ø	
Inbuild in option	
Inbuild in length	

Type 402 ST

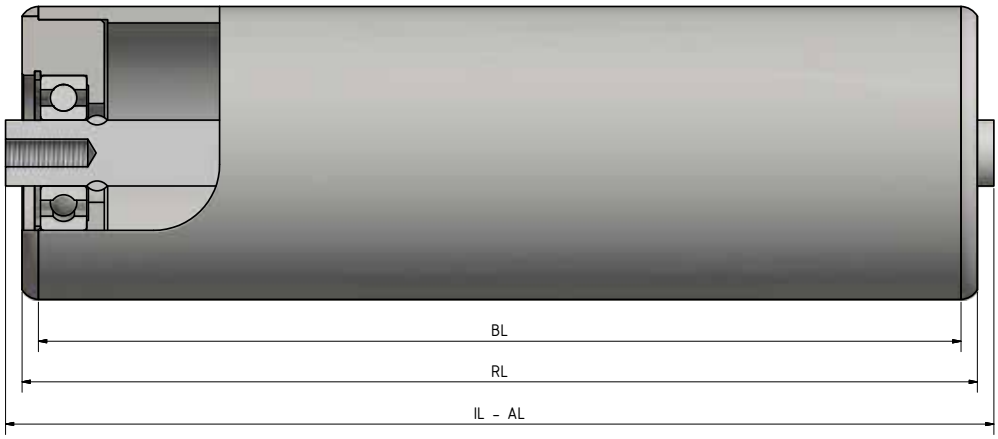

Shaft dimensions

Order Specification		A...UD...	A...VjM...	A...ID...	A...SW...
Shaft Ø	IL=				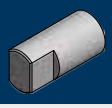
20	RL+	26	6	6	6
25	RL+		6	6	6

Tube- and Shaft Combination

Tube Ø	A20	A25
63,5 x 2,9	x	x
80 x 3	x	x
88,9 x 2,9	x	x
108 x 3,25	x	x
133 x 3,6	x	x

Optional	Coatings Page 10

Type 402 ST

Bearing Type	**Steel housing**
Bearing	Ball Bearing (Series 6004, 6005, 6204) DIN 625 available 2RS, ZZ
Load Capacity	Depending upon the load limit of tube and shaft
Maximum Speed	1,2 m/s
Range of Temperature	-5 ° to +80 °C
Optional	
Note	With special greasing even for use in Deep Freeze Areas (-28°C). Bearing housing welded to the tube.

Order Example

Type	**402 ST RS - 88,9x2,9 ST A20 ID 12x20 IL=950 mm**
Bearing Type	402 ST
Ball bearing sealing	RS
Tube Ø and wall thickness	88,9x2,9
Tube material	ST
Shaft Ø	A20
Inbuild in option	ID 12x20
Inbuild in length	IL=950 mm

Technical Notes Tube/Shaft Page 7 Bearing Holder Page 14 General Information Page 5

Brake [conveyor] rollers

Brake rollers

Type 700

Brake conveyor rollers **regulate the speed** on the conveyor. They keep the charge at a constant velocity.

This is done by a planet gear pressing centrifugal brake shoe pressing against the tube body – actually with a brake-force proportional to the applied rotation.

The distance of the brake rollers and the appropriate type of brake roller are determined by several factors:

- design and functional performance of the roller conveyor
- inclination of the roller conveyor
- character of the charge (size, weight, sensitivity, material of the runners)
- inherent mechanical resistance of the brake roller
- environmental conditions like wetness, cold or heat

One brake roller is required per pallet place; by this a regulated speed can be achieved. The processing velocity should not exceed 0,3 m/sec.

With appropriate position of the brake rollers, it will reach only 0,1 - 0,2 m/sec.

Type 700

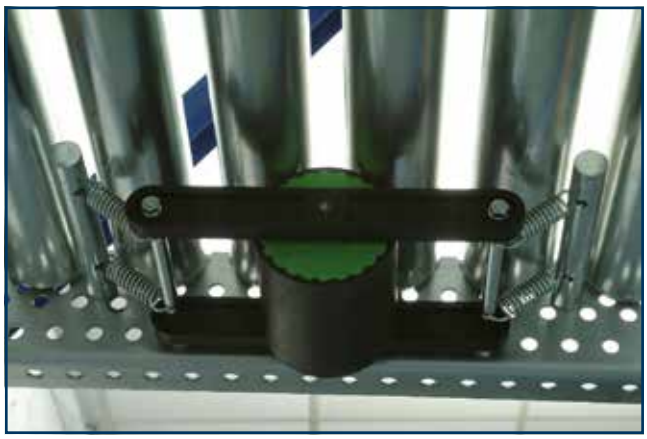

Type 710

Brake rollers

Type 700

Direct deceleration means that the brake roller is in direct contact with the charge. The brake roller is spring suspended and must protrude approximately 2 mm beyond the roller-level.

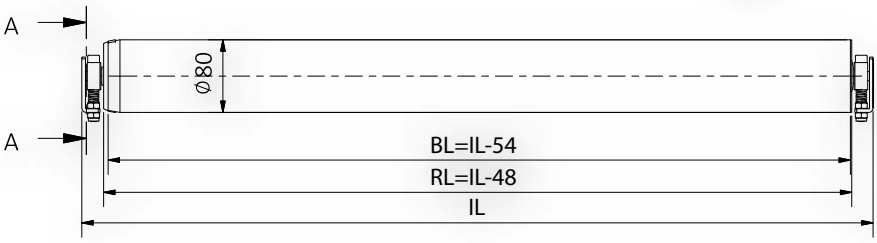

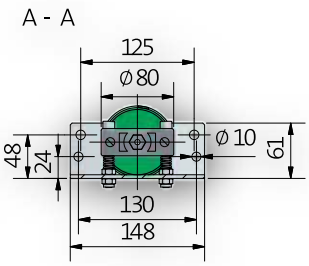

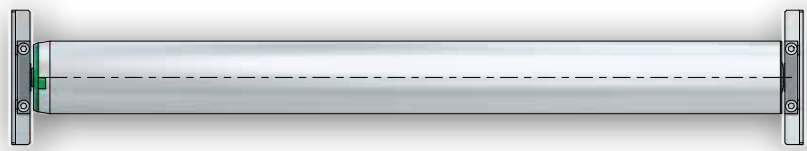

Maximum decelerated weight at approximately 3,75% inclination type 700-80: 10.000 N.

Mounting example

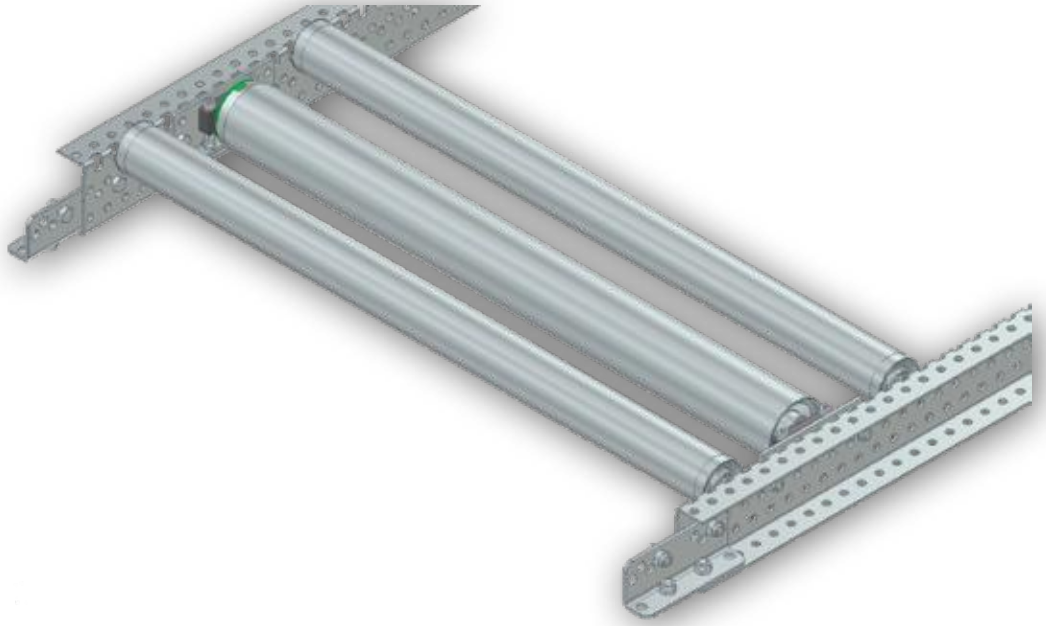

Brake rollers

Type 710

The indirect deceleration is preferable in many cases because the contact to the pallet is generated by two conveyor rollers.

To establish a better contact between brake roller, conveyor roller and pallet a friction-tape can be applied to the conveyor rollers in the range of the brake roller.

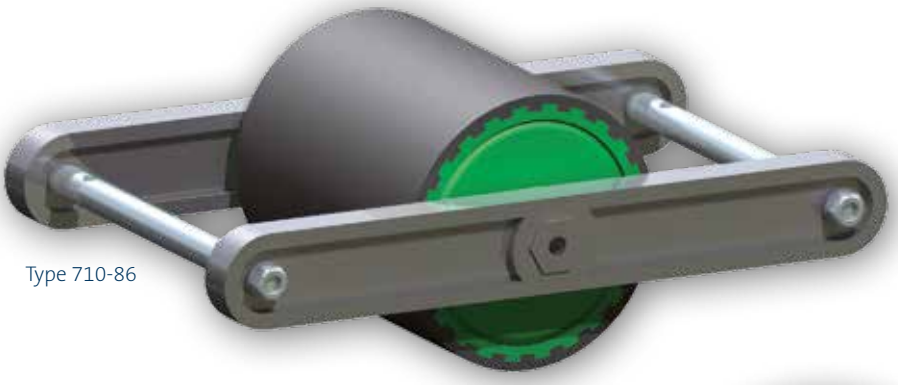

Type 710-86

Type 710-120

Brake rollers

Type 710-86

Maximum decelerated weight at approximately 3,75% inclination with type 710-86: 5.000 N. To ensure the proper function of the brake roller, weights of not less than 800 N should be decelerated.

Order example: 710-86

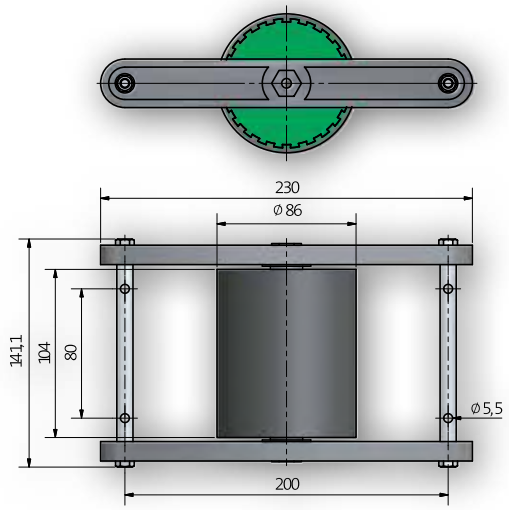

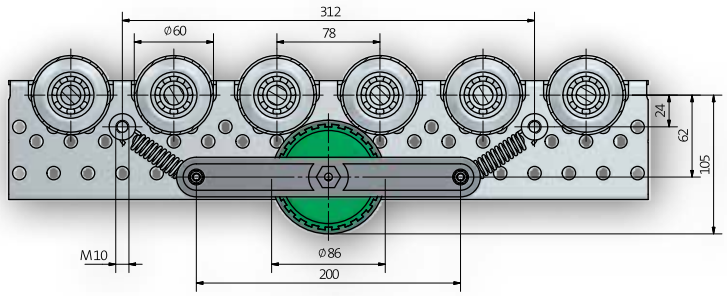

Type 710-120

Maximum decelerated weight at approximately 3,75% inclination with type 710-120: 10.000 N. To ensure the proper function of the brake roller, weights of not less than 800 N should be decelerated.

Order example: 710-120

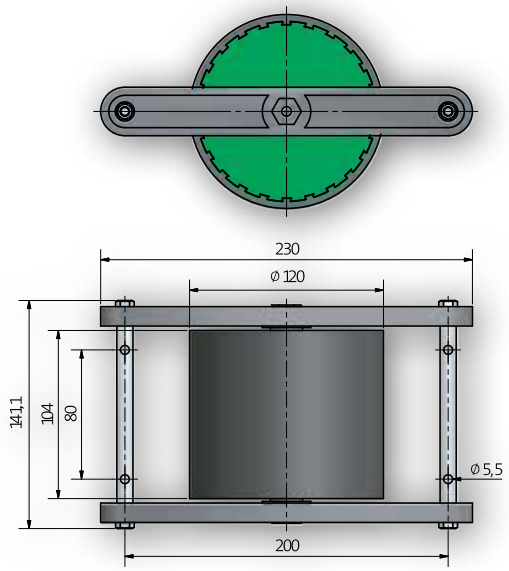

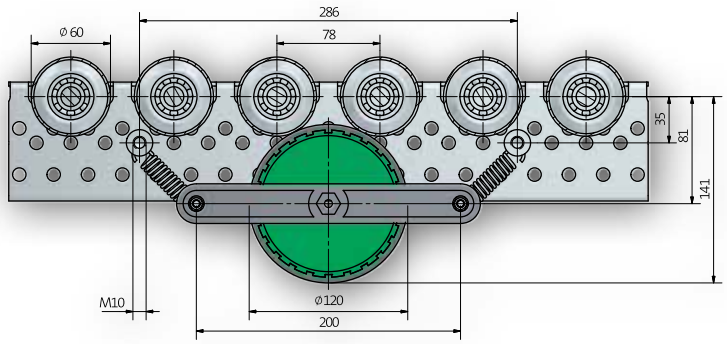

Accessories

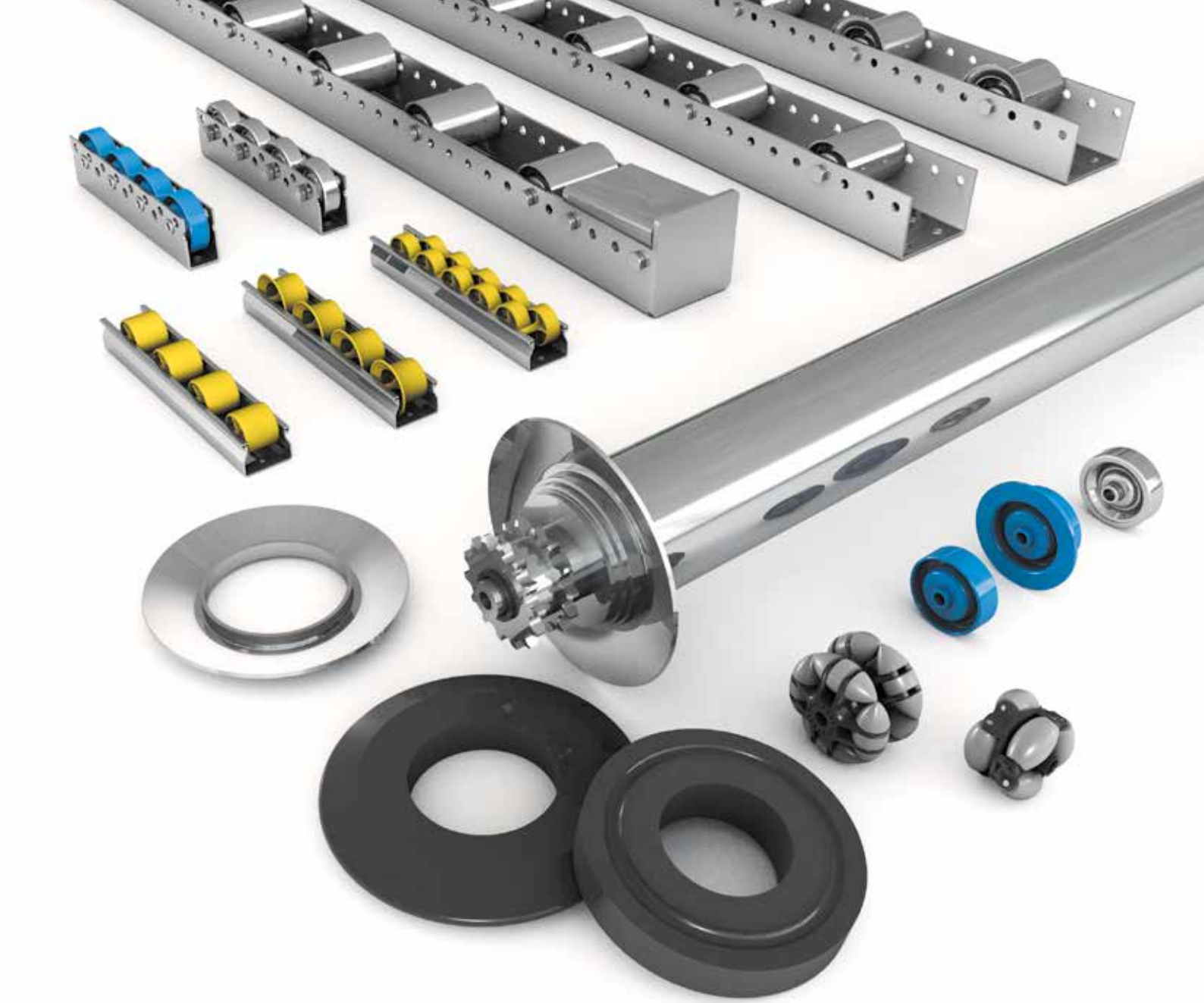

Type 610 / 611

Type 610 Plastic

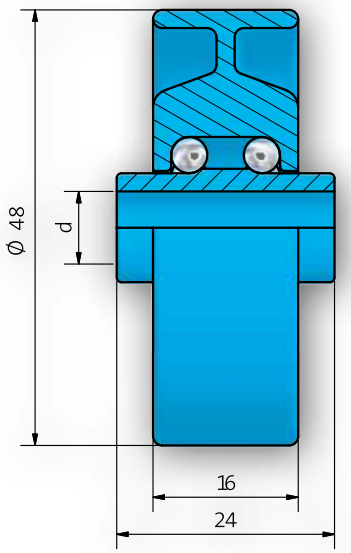

Type 611 Plastic

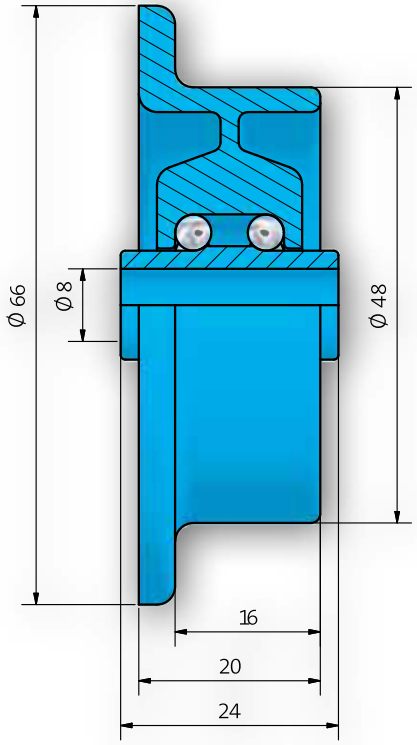

Type 612

Type 612 Steel galvanized

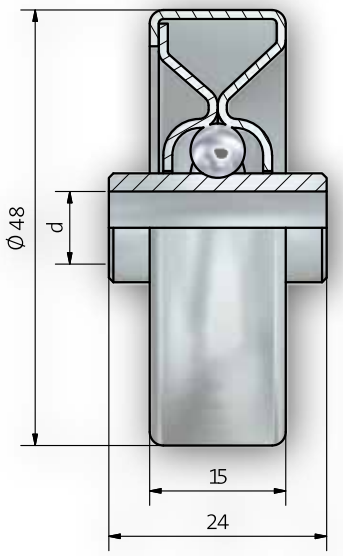

Type 610 / 611 / 612

Plastic wheels type 610 and 611 (guide flange) have a load capacity of 100 N. Steel wheels type 612 with or without guide flange have a load capacity 200 N. Available for shaft diameter 6 mm or 8 mm.

Wheels of the type 610 / 611 / 612 are used in all areas of conveyor- and storage-technology for:

- Flow-through tracks
- Guide tracks, side deflector and load tracks in conveying systems
- Roller tracks for the combination of two workstations
- Packing machines
- Guide for driving belts

Order Example

610-A6

Type

Shaft ø

Universal rollers

Type 620

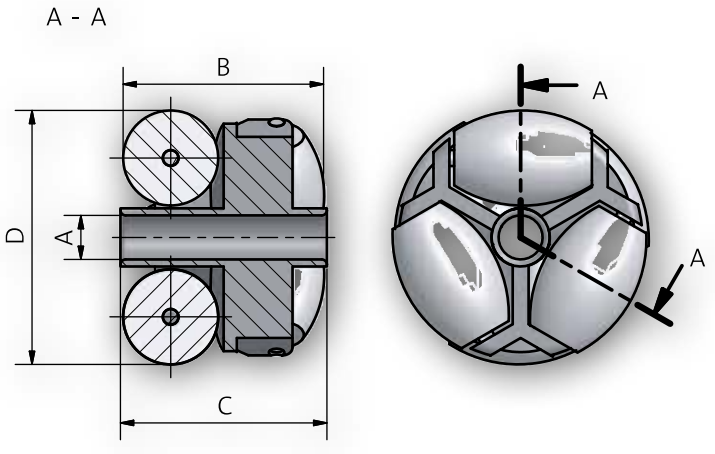

Plastic, one piece

D	40	48	60	80
A	8	8	8	8
B	26	37	47	60
C	29	39	48	64

Type 625

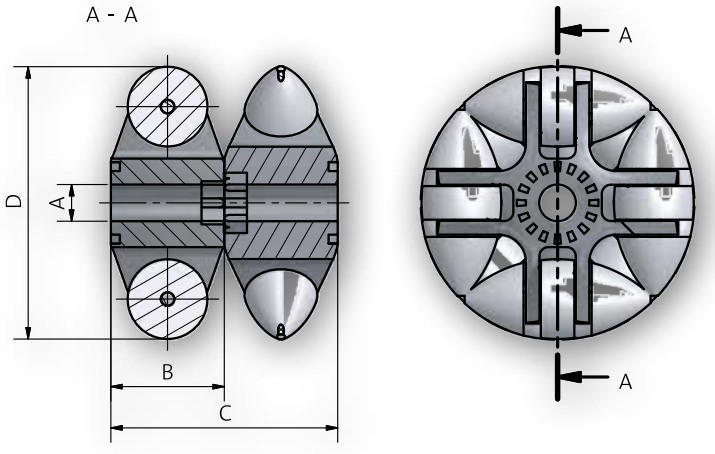

Plastic, two pieces

D	50	60	80
A	8	8	8
B	19,5	25	30
C	39	51	60

Universal rollers

Universal rollers are used where packing drums, load carrier, packages, cartons, or work pieces must be turned, assorted, diverted, supplied, or commissioned.

The size and the weight of the load regulate the pitch. Table surfaces of any sizes can be equipped with universal rollers.

The following individual load capacities per roller should not be exceeded:

- Ø 50 mm: 100 N
- Ø 60 mm: 200 N
- Ø 80 mm: 400 N

The universal rollers can be used at a temperature range between -12 ° and +80° C.
The universal rollers always must be installed in the main transport direction, as the resistance of the other direction is slightly higher.

If equal resistances should be received in all directions, wheels must be mounted staggered at 90°.

Order Example

620-D=48

Type

External diameter

Guide Flanges

Flange Type A

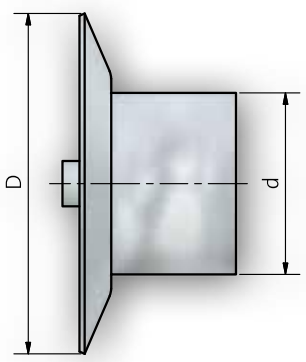

	d	D
A	30	60
	40	60
	50	70

Flange Type B

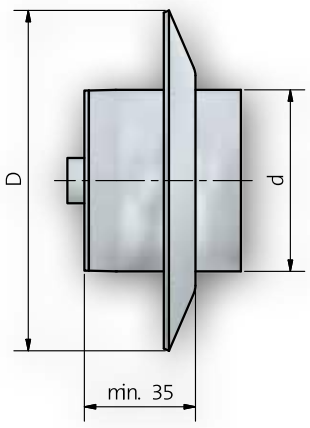

	d		D		
B	50	70			
	60	95	110	120	
	63,5	130			
	80	130	135	140	150
	88,9	30	135	140	150
	108	160			

Special dimensions upon request.

Order Example

Flange Type B d=88,9 mm D=140 mm

Type
Inner diameter
External diameter

Buffer- and support rings

Support rings

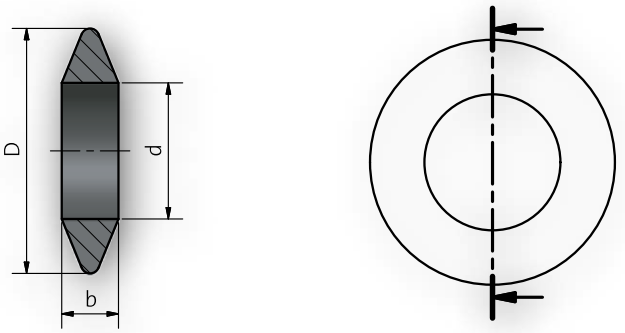

Diameter-Ø	d	D	b
63,5	60 60	108 133	25 30
88,9	85 85	133 159	30 30
108	104	159	30

Special dimensions upon request.

Buffer rings

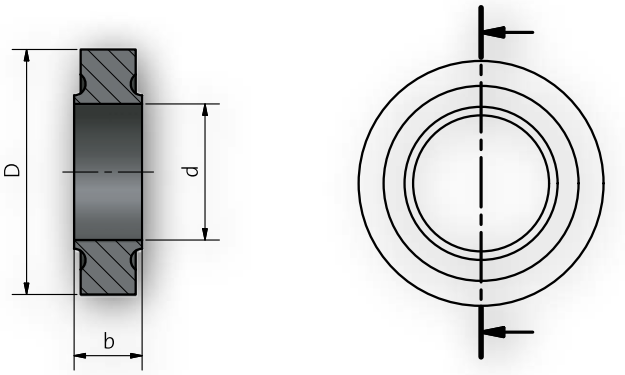

Diameter-Ø	d	D	b
50	48	89	30
63,5	60 60	89 108	25 30
88,9	86 86	133 159	35 35

Special dimensions upon request.

Order Example

Support ring d=63,5mm D=108 mm

Type

Inside Diameter

External Diameter

Roller Rail

Type 720

The pallet rail type 720 is a universal roller rail which is frequently used for **pallet transport**. Roller tracks for euro-pallets, boxes and other carriers with roller rail approved surface are simply built of this item. Equally for intralogistics, linking workspace or lateral guide – the pallet rail type 720 is of versatile use.

The pallet rail consists of a galvanized U-profile, 55 mm high and 80 mm width. The profiles are equipped with rollers Ø 50 mm in a pitch of 52 mm, 78 mm, 104 mm, 130 mm, 156 mm etc.

Two additional holes in the bottom serve for mounting the rail onto a frame or directly to the ground.

Available up to 6006 mm.

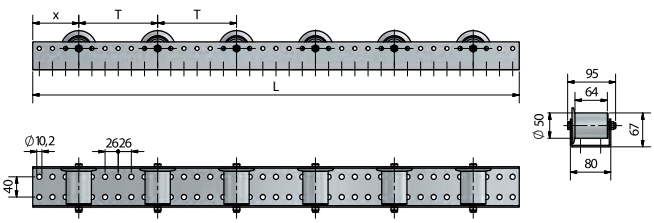

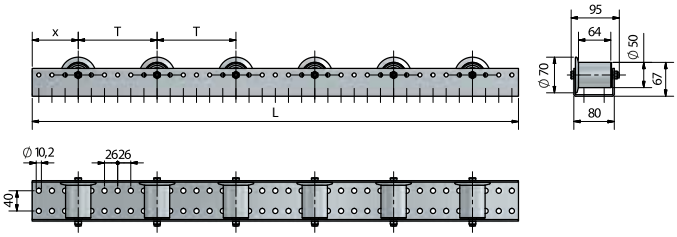

Type 720 – Technical data

Applications	Pallet transport, intralogistics, linking of workspace, lateral guide
Rail material	Galvanized U-profile
Load capacity per roller	Steel roller 150 kg/pcs.
Moment of resistance – in cm³	4,6
Diameter in mm	50
Pitch in mm	52, 78, 104, 130, 156, etc.

Roller rail

Type 720 Profile
Order example: 720 Profile L = 2.444

720 - 200-50x1.5 STV

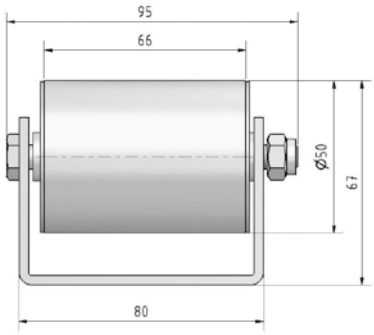

720 - 200-50x1.5 STV 2K

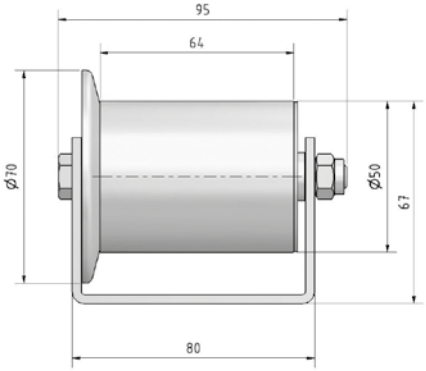

Type 720

Pitch

52 mm, 78 mm, 104 mm, 130 mm, 156 mm, etc.

Roller type

2K - flanged roller
Without designation – standard roller

Length

Available up to 6.006 mm, increment 26 mm.
Other dimensions on request.

Order Example

720-156 2K 2.444

- Profile
- Pitch T
- Type of roller
- Length

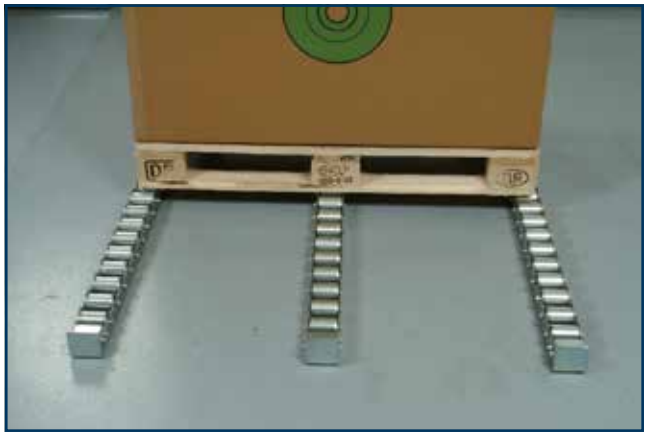

Type 720 – Accessories

720
Roller protection

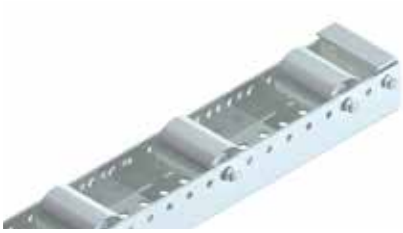

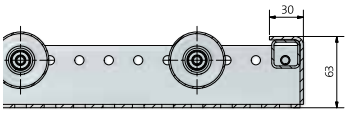

720
Connector U

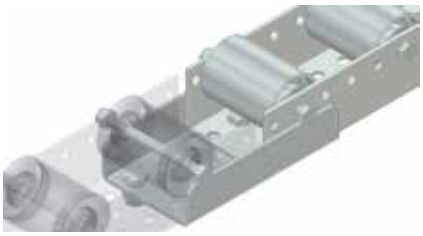

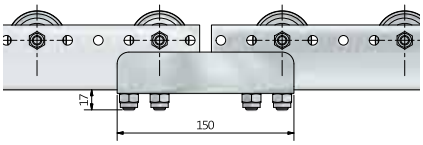

720
Connector side

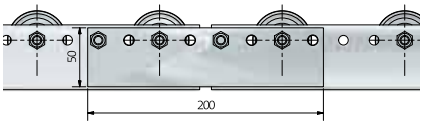

720
End stopper

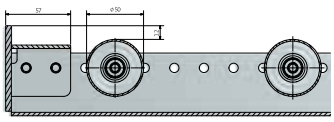

720
End stopper friction

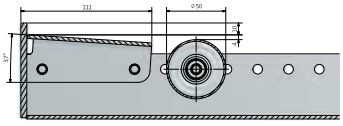

720
Fixing clip

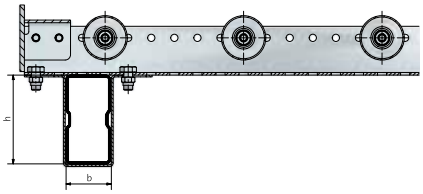

Please give dimensions of rack beam when ordering e.g.: Fixing clip 100 x 50 for a beam with h = 100 mm and b = 50 mm (required when ordering, if req. drawing of beam)

720
Fixing angle

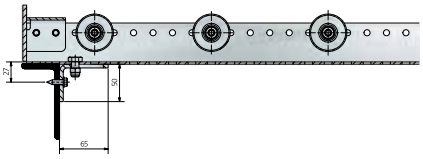

Type 723

The roller rail consists of a cold-rolled, galvanized steel profile of 2 mm thickness. The profile has laterally two distinct series of holes at different heights with a pitch of 25 mm.

The design of the rail allows to fix the Ø 48 mm roller either with tubular rivets (standard) or bolts M8.

Several rollers can be placed side by side in one, two, three or more rails. Furthermore, the rollers can be placed with offset and different roller types can be combined.

Available up to 6.006 mm.

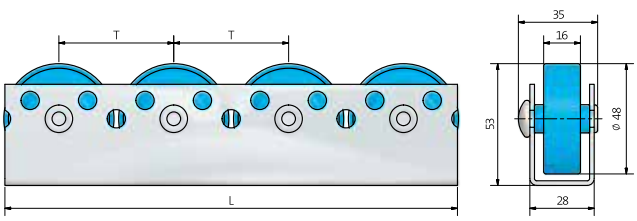

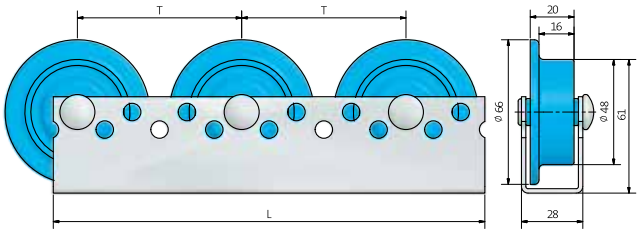

Type 723 – Technical data

Applications	Carton- & plastic box transport, flow-through rack, commissioning store, guide, assembly machines
Rail material	Galvanized steel profile
Load capacity per roller	Plastic roller 10 kg Steel roller 20 kg
Moment of resistance – in cm³	2,2
Diameter in mm	48
Length in mm	6.000
Pitch in mm	50, 75, 100, etc.

Type 723

Pitch

50 mm, 75 mm, 100 mm, 125 mm, 150 mm

Order Example

723-150 K O 2.447

- Profile
- Pitch T
- Type of Roller
- Hole series
- Length

Roller possibilities

A	All-side roller
K	Plastic roller
SPK	Flanged roller - plastic
SPS	Flanged roller - steel
o.K.	Steel rollers

Position hole series

O	Upper series
o.K.	Lower series

Length

Available up to 6.000 mm.

723 Profile

723 End stopper

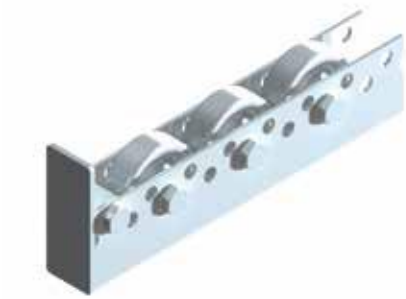

Type 726

The main field for mini rails is the use in flow-through racks. Also, the stable running of transport boxes and cartons allows various applications. Examples are:

- Guiding rails for conveyor systems.
- Rail-tracks and rail-carpets for linking workstations.
- Packing and commissioning tables.
- Assembly aid, e.g. in wood-processing and window production.

The steel shaft of the wheel guarantees high load capacity and a very low friction resistance. The wheels are made of high-quality thermoplastic resin, which is impact resistant. The material is resistant against acids and lyes and does not absorb moisture. The torsion-resistant mini rail-profile is a rolled galvanized steel sheet and has its edges rounded in all directions. Due to the application, you can use different pitches.

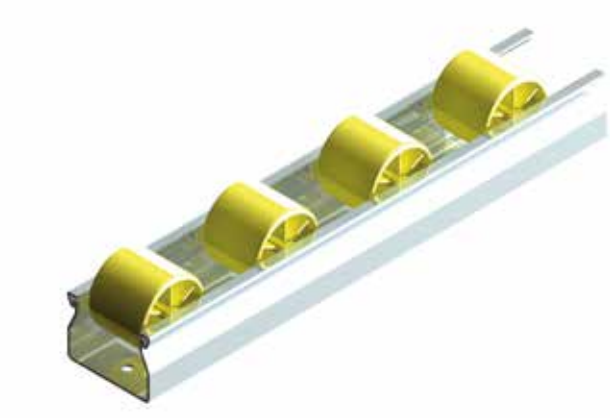

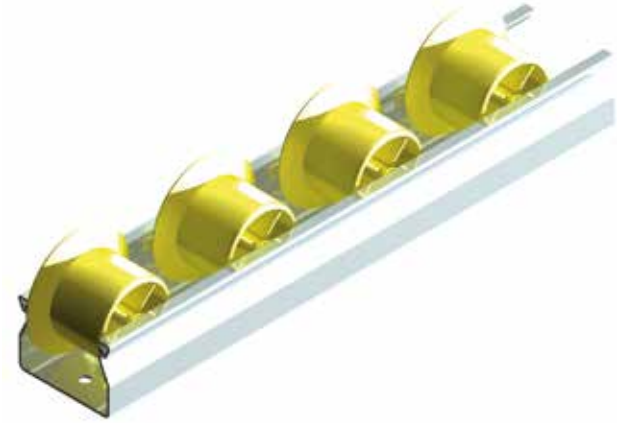

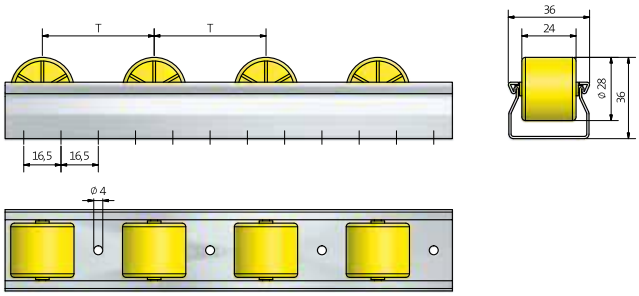

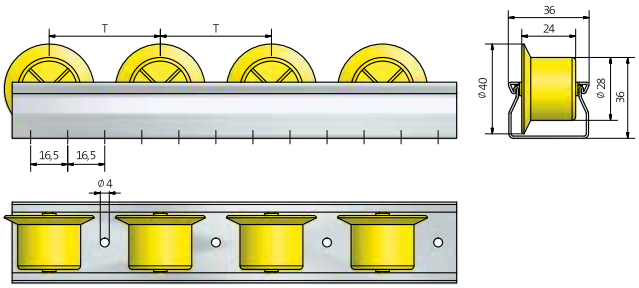

Type 726 – Technical data

Applications	Rail-tracks, rail-carpets, guide, worktable, linking worktables
Rail material	Steel profile
Load capacity per wheel	Plastic wheel 2 kg/pcs.
Moment of resistance – in cm³	0,5
Diameter in mm	28
Pitch in mm	33, 50, 66, 83, 100, etc.
Temperature range	-30 ° to +80 °C

Type 726

Pitch

33 mm, 50 mm, 66 mm, 83 mm, 100 mm

Wheel types

o.K.	Plastic wheels
K	Plastic rolls
SPK	Flanged wheels - plastic
G	Split wheels
TK	Deep-freeze
L	Conductive

Length

Available up to 4.500 mm

Order Example

726-50 SPK 2.447

- Profile
- Pitch T
- Wheel type
- Length

The mini rail with steel shaft for smooth material flow and noiseless transport are:

- Strong
- Economic
- Variably deployable

Wheels available for deep-freeze and conductive
Different colors on request.

726 Profile

726 Profile – split wheels

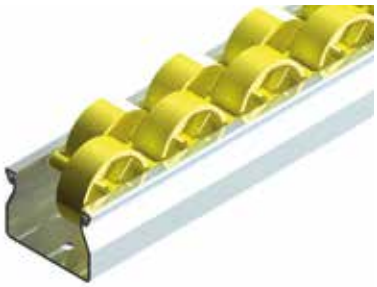

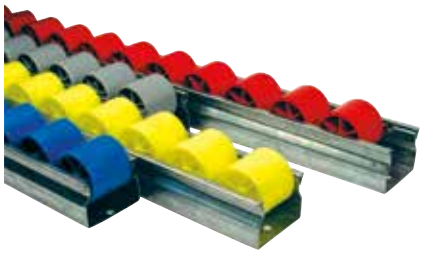

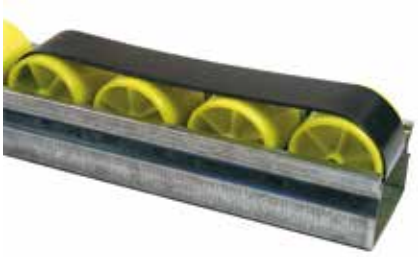

Type 726 - Accessories

Plastic guide central or lateral
Order example: 726 plastic guide central

Braking ramp
Order example: 726 braking ramp

Anti-opening clip
Order example: 726 anti-opening clip

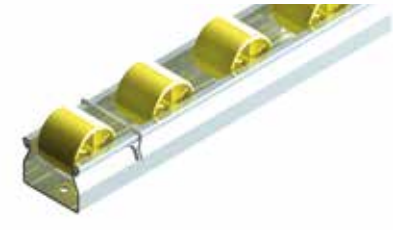

Holding clip
Order example: 726 holding clip

End stopper / anti-return buffer
Order example: 726 end stopper

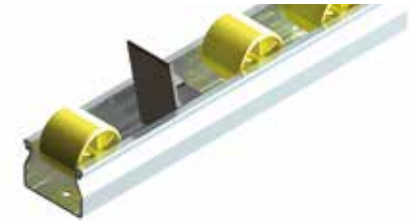

ESCH CONVEYOR COMPONENTS

TERMS AND CONDITIONS OF THE METAALUNIE 1 January 2019

General Terms and Conditions issued by Koninklijke Metaalunie (the employers' organisation for small and medium-sized enterprises in the metal industry) referred to as TERMS AND CONDITIONS OF THE METAALUNIE, filed with the Registry of the Court of Rotterdam on 1 January 2019. Publication of the Koninklijke Metaalunie, P.O. Box 2600, 3430 GA, Nieuwegein.

Article 1: Scope of application

1.1. These Terms and Conditions apply to all offers made by a Metaalunie member, to all agreements that it enters into and to all agreements arising from this, all of which insofar as the Metaalunie member is the supplier or the contractor.

1.2. Metaalunie members who apply these Terms and Conditions are referred to as the Contractor. The other party is referred to as the Client.

1.3. In the event of conflicts between the agreement entered into by the Client and the Contractor and these Terms and Conditions, the provisions of the agreement will prevail.

1.4. These Terms and Conditions may only be applied by Metaalunie members.

Article 2: Offers

2.1. All offers are without obligation. The Contractor is entitled to revoke its offer up to two working days after it has received the acceptance.

2.2. If the Client provides the Contractor with information, the Contractor may assume that it is accurate and complete and will base its offer on this information.

2.3. The prices stated in the offer are denominated in euros, excluding VAT and other government levies or taxes. The prices do not include travel, accommodation, packaging, storage and transport costs, nor do they include costs for loading, unloading and cooperating with customs formalities.

Article 3: Confidentiality

3.1. All information provided to the Client by or on behalf of the Contractor, such as offers, designs, images, drawings and know-how, of whatever nature and in whatever form are confidential, and the Client will not use it for any purpose other than for the implementation of the agreement.

3.2. The Client will not disclose or reproduce the information referred to in paragraph 1 of this article.

3.3. If the Client infringes one of the obligations referred to in paragraphs 1 and 2 of this article, it will owe an immediately payable penalty of € 25,000 for each infringement. This penalty can be claimed in addition to compensation by virtue of the law.

3.4. The Client must return or destroy the information referred to in paragraph 1 of this article immediately on request, within a period set at the discretion of the Contractor. If this provision is infringed, the Client will owe the Contractor an immediately payable penalty of € 1,000 per day. This penalty can be claimed in addition to compensation by virtue of the law.

Article 4: Advice and information provided

4.1. The Client cannot derive any rights from advice and information provided by the Contractor that is not directly related to the contract.

4.2. If the Client provides the Contractor with information, the Contractor may assume that it is accurate and complete when implementing the agreement.

4.3. The Client indemnifies the Contractor against any third-party claims related to the use of advice, drawings, calculations, designs, materials, brands, samples, models and the like provided by or on behalf of the Client. The Client will compensate the Contractor for all damage suffered by the Contractor, including all costs incurred for defence against these claims.

Article 5: Delivery time/implementation period

5.1. Delivery times or implementation periods specified are indicative.

5.2. The delivery time or implementation period only commences once an agreement has been reached on all commercial and technical details, once all the information, including final and approved drawings and the like, is in the possession of the Contractor, the agreed payment (or instalment) has been received, and the other conditions for the contract have been met.

5.3. If:
a. there are circumstances other than those known to the Contractor at the time it set the delivery period or implementation period, the delivery period or implementation period may be extended by the time the Contractor needs – taking into account its planning – to implement the contract under these circumstances;
b. there are contract extras, the delivery period or implementation period may be extended by the time the Contractor needs – taking into account its planning – to have the materials and parts delivered and to carry out the contract extras;
c. the Contractor suspends its obligations, the delivery period or implementation period may be extended by the time the Contractor needs – taking into account its planning – to implement the contract after the reason for the suspension no longer applies.

Unless the Client has evidence to the contrary, the duration of the extension of the delivery period or implementation period is presumed to be necessary and to be the result of a situation as referred to above in a to c.

5.4. The Client is obliged to pay all costs that the Contractor incurs or damages that the Contractor suffers as a result of a delay in the delivery or implementation period as stated in paragraph 3 of this article.

5.5. Under no circumstances does exceeding the agreed delivery or implementation period give the Client the right to compensation or to terminate the agreement. The Client indemnifies the Contractor against any third-party claims due to exceeding the delivery or implementation period.

Article 6: Delivery and risk transfer

6.1. Delivery takes place when the Contractor, at its business location, makes the good available to the Client and has informed the Client that the good is at its disposal. From that time onwards, the Client bears the risk of the good in terms of storage, loading, transport and unloading among others.

6.2. The Client and the Contractor may agree that the Contractor will be responsible for the transport. In that case too, the Client bears the risk of, inter alia, storage, loading, transport and unloading. The Client can insure itself against these risks.

6.3. If a good is exchanged and the Client retains the good to be exchanged pending delivery of the new good, the risk of the good to be exchanged remains with the Client until the time that it hands over the good to the Contractor. If the Client is unable to deliver the good to be exchanged in the condition in which it was when the agreement was concluded, the Contractor may terminate the agreement.

Article 7: Price changes

The Contractor may pass on to the Client an increase in cost-determining factors that occurs after entering into the agreement. The Client is obliged to pay the price increase immediately on the Contractor's request.

Article 8: Force majeure

8.1. If the Contractor fails to fulfil its obligations, this cannot be attributed to the Contractor if this failure is due to force majeure.

8.2. Force majeure includes, inter alia, if third parties engaged by the Contractor – such as suppliers, subcontractors and transporters, or other parties that the Client is dependent on – do not meet their obligations at all or on time, or circumstances due to weather conditions, natural disasters, terrorism, cybercrime, disruption of digital infrastructure, fire, power failures, loss, theft or loss of tools, materials or information, roadblocks, strikes or work interruptions and import or trade restrictions.

8.3. The Contractor is entitled to suspend fulfilment of its obligations if it is temporarily prevented from fulfilling its obligations to the Client due to force majeure. Once the force majeure circumstances no longer apply, the Contractor will fulfil its obligations as soon as its planning permits.

8.4. If it concerns force majeure and fulfilment is or becomes permanently impossible, or the temporary force majeure circumstances have lasted for more than six months, the Contractor is entitled to terminate the agreement with immediate effect either entirely or in part. In those cases, the Client is entitled to terminate the agreement with immediate effect, but only for that part of the obligations that the Contractor has not yet fulfilled.

8.5. The parties are not entitled to compensation for the damages suffered or to be suffered as a result of the force majeure, suspension or termination as referred to in this article.

Article 9: Scope of the work

9.1. The Client must ensure that all licences, exemptions and other decisions that are necessary to carry out the work are obtained in good time. The Client is obliged to send the Contractor a copy of the aforementioned documents immediately on the Contractor's request.

9.2. Unless otherwise agreed in writing, the work does not include:
a. groundwork, pile driving, cutting, breaking, foundation work, masonry, carpentry, plastering, painting, wallpapering, repair work or other construction work;
b. making connections to gas, water, electricity, internet or other infrastructural facilities;
c. measures to prevent or limit damage to, of theft or loss of goods present at or near the workplace;
d. removing equipment, building materials or waste;
e. vertical and horizontal transport.

Article 10: Contract extras

10.1. Changes in the work will in any event lead to contract extras if:
a. it concerns changes in the design, the specifications or the contract documents;
b. the information provided by the Client does not correspond with reality;
c. the estimated quantities deviate by more than 5%.

10.2. Contract extras are calculated on the basis of the price-determining factors that apply at the time the extra work is performed. The Client is obliged to pay the price for the contract extras immediately on the Contractor's request.

Article 11: Implementation of the work

11.1. The Client will ensure that the Contractor can carry out its work undisturbed and at the agreed time and that it is given the necessary facilities for the implementation of its work, such as:
a. gas, water, electricity and internet;
b. heating;
c. lockable dry storage space;
d. the facilities prescribed under the Dutch Working Conditions Act [Arbowet].

11.2. The Client bears the risk and is liable for damage to and theft or loss of goods belonging to the Contractor, Client and third parties, such as tools, material or equipment intended for the work or used for the work, located at or near the place where the work is carried out or at another agreed location.

11.3. Notwithstanding the provisions in paragraph 2 of this article, the Client is obliged to take out adequate insurance against the risks referred to in that paragraph. In addition, the Client must take out insurance for the risk of work-related damage with regard to the equipment to be used. The Client must send the Contractor a copy of the relevant insurance(s) and proof of payment of the premium immediately on request. In the event of damages, the Client is obliged to report this immediately to its insurer for further processing and settlement.

Article 12: Delivery of the work

12.1. The work is considered to be delivered in the following cases:
a. once the Client has approved the work;
b. if the Client has put the work into operation. If the Client puts part of the work into operation, then that part is considered to have been delivered;
c. if the Contractor has notified the Client in writing that the work has been completed, and the Client fails to inform the Contractor in writing that the work has not been approved within 14 days of the day of the notification;
d. if the Client does not approve the work on the grounds of minor defects or missing parts that can be repaired or delivered within 30 days and that do not hinder the commissioning of the work.

12.2. If the Client does not approve the work, it is obliged to inform the Contractor of this in writing, stating the reasons. The Client must give the Contractor the opportunity to deliver the work at a later date.

12.3. The Client indemnifies the Contractor against third-party claims concerning damage to parts of the work not delivered due to the use of parts of the work that have already been delivered.

Article 13: Liability

13.1. In the event of an attributable failure, the Contractor is still obliged to fulfil its contractual obligations, with due observance of Article 14.

13.2. The Contractor's obligation to compensate damages – regardless of the grounds – is limited to the damage against which the Contractor is covered under an insurance policy taken out by it or on its behalf. However, the scope of this obligation is never greater than the amount paid out under this insurance in the case in question.

13.3. If, for whatever reason, the Contractor does not have the right to invoke paragraph 2 of this article, the obligation to compensate damage is limited to a maximum of 15% of the total contract amount (excluding VAT). If the agreement consists of parts or partial deliveries, this obligation is limited to a maximum of 15% (excluding VAT) of the contract amount for that part or that partial delivery. If it concerns continuing performance contracts, the obligation to compensate damage is limited to a maximum of 15% (excluding VAT) of the contract amount owed over the last twelve months prior to the loss-causing event.

13.4. The following do not qualify for compensation:
a. consequential damages. Consequential damages include inter alia business interruption losses, loss of production, loss of profit, penalties, transport costs and travel and subsistence expenses;
b. damage to property in the care, custody or control of, but not owned by the insured party. Among other things, this damage includes damage caused by or during the performance of the work to goods that are being worked on or to goods that are located in the vicinity of the place where the work is being carried out;
c. damage as a result of intent or wilful recklessness by the Contractor's auxiliary staff or non-managerial subordinates.

The Client can take out insurance for these damages if possible.

13.5. The Contractor is not obliged to compensate damage to material supplied by or on behalf of the Client as a result of improper processing.

13.6. The Client indemnifies the Contractor against all third-party claims due to product liability as a result of a defect in a product that has been delivered by the Client to a third party and of which the products or materials supplied by the Contractor are a part. The Client is obliged to reimburse all the damages suffered by the Contractor in this respect, including the (full) costs of the defence.

Article 14: Guarantee and other claims

14.1. Unless otherwise agreed in writing, the Contractor guarantees the proper execution of the agreed performance for a period of six months after delivery or completion, as detailed in the following paragraphs.

14.2. If the parties have agreed to deviating guarantee conditions, the provisions of this article will remain in full force, unless this is in conflict with those deviating guarantee conditions.

14.3. If the agreed performance has not been executed properly, the Contractor will decide within a reasonable period of time whether it will still perform the work properly or credit the Client for a proportionate part of the contract amount.

14.4. If the Contractor opts to still execute the performance properly, it will determine the manner and time of execution. The Client must in all cases offer the Contractor the opportunity to do so. If the agreed performance (also) included the processing of material provided by the Client, the Client must supply new material at its own expense and risk.

14.5. The Client is responsible for sending parts or materials that are to be repaired or replaced by the Contractor to the Contractor's business location.

14.6. The following are for the Client's account:
a. all transport or shipping costs;
b. costs for dismantling and assembly;
c. travel and subsistence expenses and travel time.

14.7. The Contractor is only obliged to implement the guarantee if the Client has fulfilled all its obligations.

14.8. a. The guarantee does not cover defects that are the result of:
- normal wear and tear;
- improper use;
- lack of maintenance or maintenance carried out incorrectly;
- installation, assembly, modification or repairs carried out by the Client or third parties;
- faulty or unsuitable goods originating from or prescribed by the Client;
- faulty or unsuitable materials or tools used by the Client.

b. No guarantee is given for:
- goods delivered that were not new at the time of delivery;
- inspections and repairs carried out on goods owned by the Client;
- parts that are subject to a manufacturer's guarantee.

14.9. The provisions of paragraphs 3 to 8 of this article apply by analogy to any of the Client's claims based on breach of contract, non-conformity or any other basis whatsoever.

Article 15: Obligation to complain

15.1. The Client no longer has the right to invoke a defective performance if it has not complained to the Contractor in writing within fourteen days after it discovered or should reasonably have discovered the defect.

15.2. The Client must have filed complaints about the invoice with the Contractor in writing and within the payment term, subject to forfeiture of all rights. If the payment term is longer than thirty days, the Client must have filed its complaint in writing within thirty days of the invoice date at the latest.

Article 16: Failure to take possession of goods

16.1. The Client is obliged to take actual possession of the goods that are the subject of the agreement at the agreed location at the end of the delivery or implementation period.

16.2. The Client must cooperate fully and free of charge to enable the Contractor to deliver the goods.

16.3. Goods not taken into possession are stored at the Client's expense and risk.

16.4. If the provisions of paragraph 1 or 2 of this article are infringed, the Client will owe the Contractor a penalty for each infringement of € 250 per day up to a maximum of € 25,000, after the Contractor has given notice of default. This penalty can be claimed in addition to compensation by virtue of the law.

Article 17: Payment

17.1. Payment is made at the Contractor's business address or into an account to be designated by the Contractor.

17.2. Unless otherwise agreed, payments must be made within 30 days of the invoice date.

17.3. If the Client fails to fulfil its payment obligation, it is obliged to comply with a request from the Contractor for a tender of payment instead of the agreed amount.

17.4. The Client's right to offset its claims against the Contractor or to suspend the fulfilment of its obligations is excluded, unless the Contractor has been granted a suspension of payments or is bankrupt or the statutory debt adjustment scheme applies to the Contractor.

17.5. Irrespective of whether the Contractor has fully executed the agreed performance, everything that the Client owes or will owe it under the agreement is immediately due and payable if:
a. a payment term has been exceeded;
b. the Client does not fulfil its obligations under Article 16;
c. the Client has filed for bankruptcy or suspension of payments;
d. the Client's goods or claims have been attached;
e. the Client (a company) is dissolved or wound up;
f. the Client (a natural person) files a application to be admitted to the statutory debt adjustment scheme, is placed under a guardianship order or has died.

17.6. If payment is delayed, the Client will owe interest on that sum to the Contractor with effect from the day following the day agreed as the final day of payment up to and including the day on which the Client settles the amount in question. If the parties have not agreed on the final day of payment, the interest is due from 30 days after the sum has become due and payable. The interest is 12% per year, but is equal to the statutory interest if this is higher. For the interest calculation, a part of the month is considered to be a full month. At the end of each year, the amount on which the interest is calculated will be increased by the interest due for that year.

17.7. The Contractor is entitled to offset its debts to the Client against claims that companies affiliated to the Contractor have against the Client. In addition, the Contractor is entitled to offset its claims to the Client against debts that companies affiliated to the Contractor have against the Client. Furthermore, the Contractor is entitled to offset its debts to the Client against claims against companies affiliated to the Client. 'Affiliated companies' means all companies belonging to the same group, within the meaning of Book 2, Section 24b of the Dutch Civil Code, and a participation within the meaning of Book 2, Section 24c of the Dutch Civil Code.

17.8. For late payments, the Client owes the Contractor all extrajudicial costs with a minimum of € 75.

These costs are calculated on the basis of the following table, i.e., the principal sum plus interest:

on the first	€ 3,000	15%
on the excess up to	€ 6,000	10%
on the excess up to	€ 15,000	8%
on the excess up to	€ 60,000	5%
on the excess from	€ 60,000 or more	3%

The extrajudicial costs actually incurred are due if they are higher than the calculation given above.

17.9. If judgment is rendered in favour of the Contractor in legal proceedings, either entirely or for the most part, the Client will bear all costs incurred in connection with these proceedings.

Article 18: Securities

18.1. Irrespective of the agreed payment terms, the Client is obliged to provide sufficient security for payment immediately on the Contractor's request and at its discretion. If the Client does not comply with this provision within the set time limit, it will immediately be in default. In that case, the Contractor has the right to terminate the agreement and to recover its damages from the Client.

18.2. The Contractor remains the owner of the delivered goods as long as the Client:
a. has not fulfilled its obligations under any agreement with the Contractor;
b. claims arising from non-fulfilment of the aforementioned agreements, such as damage, penalties, interest and costs, have not been settled.

18.3. As long as the delivered goods are subject to retention of title, the Client may not encumber or dispose of these goods other than in the course of its normal business operations. This provision has effect under property law.

18.4. After the Contractor has invoked its retention of title, it may take back the delivered goods. The Client will cooperate fully with this.

18.5. If the Client has fulfilled its obligations after the Contractor has delivered the goods to it in accordance with the agreement, the retention of title with respect to these goods is revived if the Client does not fulfil its obligations under an agreement entered into subsequently.

18.6. The Contractor has a right of pledge and a right of retention on all goods that it has or may receive from the Client on any grounds whatsoever and for all claims that it has or might have against the Client.

Article 19: Intellectual property rights

19.1. The Contractor is considered to be the maker, designer or inventor of the works, models or inventions created in the context of the agreement. The Contractor therefore has the exclusive right to apply for a patent, trademark or model.

19.2. The Contractor will not transfer any intellectual property rights to the Client in the implementation of the agreement.

19.3. If the performance to be delivered by the Contractor (also) includes providing computer software, the source code will not be handed over to the Client. The Client will only acquire a non-exclusive, worldwide and perpetual licence for use for the computer software solely for the purpose of the normal use and proper functioning of the good. The Client is not permitted to transfer the licence or to issue a sub-licence. When the Client sells the good to a third party, the licence transfers by operation of law to the acquirer of the good.

19.4. The Contractor disclaims liability for damages that the Client suffers as a result of an infringement of third-party intellectual property rights. The Client indemnifies the Contractor against any third-party claims related to an infringement of intellectual property rights.

Article 20: Assignment of rights or obligations

The Client may not assign or pledge any rights or obligations pursuant to any article in these General Terms and Conditions or the underlying agreement(s), unless it has the prior written consent of the Contractor. This provision has effect under property law.

Article 21: Cancellation or termination of the agreement

21.1. The Client is not entitled to cancel or terminate the agreement, unless the Contractor agrees to this. If the Contractor agrees, the Client will owe the Contractor an immediately due and payable compensation equal to the agreed price, less the savings for the Contractor as a result of the termination. The compensation will be at least 20% of the agreed price.

21.2. If the price depends on the actual costs to be incurred by the Contractor (on a cost-plus basis), the compensation as referred to in the first paragraph of this article is estimated based on the sum of the costs and labour and the profit that the Contractor would have made for the entire contract.

Article 22: Applicable law and competent court

22.1. Dutch law applies.

22.2. The Vienna Sales Convention (CISG) does not apply, nor does any other international regulation that may be excluded.

22.3. The Dutch civil court with jurisdiction in the Contractor's place of business is authorised to take cognisance of any disputes. The Contractor may deviate from this rule governing jurisdiction and rely on the statutory rules governing jurisdiction instead.

These Terms and Conditions constitute a comprehensive translation of the Dutch version of the Terms and Conditions of the Metaalunie as filed with the Registry of the Court of Rotterdam on 1 January 2019. The Dutch version will prevail in the explanation and interpretation of this text.

Weight

Shaft Ø	Dimensions in mm	Weight in kg/m
	5	0,154
	6	0,222
	8	0,395
	AZK 8	0,435
	10	0,617
	11	0,823
	AZK 11	0,823
	12	0,888
	14	1,208
	15	1,387
	17	1,782
	20	2,466
	25	3,853

Plastic tube	Dimensions in mm	Weight in kg/m
	20 x 1,5	0,137
	30 x 1,8	0,245
	40 x 2,3	0,419
	50 x 2,8	0,64
	63 x 3	0,87
	90 x 7	2,809
	HDPE 88,9 x 6,3	1,814
	HDPE 108 x 7,3	2,496

Steel- and Stainless steel tube	Dimensions in mm	Weight in kg/m
	16 x 1	0,37
	20 x 1,5	0,684
	30 x 1	0,715
	30 x 1,5	1,054
	32 x 2	1,48
	40 x 1,5	1,425
	50 x 1,5	1,794
	50 x 2	2,368
	50 x 3	3,477
	60 x 2	2,861
	60 x 3	4,217
	60,3 x 1,65	2,385
	63,5 x 2,9	4,334
	70 x 2	3,354
	70 x 2,9	4,83
	80 x 2	3,847
	80 x 3	5,696
	88,9 x 2,9	6,151
	88,9 x 5	10,36
	108 x 3,25	8,396
	133 x 3,6	11,488
	159 x 4	17,14

Construction advice

Common construction advice:

- For linear and quiet running of the goods, please look for parallelism of shafts, institutional roller level and parallelism of the roller track.
- Be aware of environmental conditions (dust, humidity, acids etc.).
- Be aware of electrostatic charges.
- Maximum roller length/ load capacities of the different materials (steel or plastic tube).
- Tolerances of the tube (see page 7).
- Be considerate of the difference in rolling resistance of the bearings.
- Do not choose plastic parts at higher temperatures.
- For uneven surfaces note different load distribution.
- Colour variations possible.

Construction advice driven roller:

- For uneven surfaces use adjustable accumulation rollers.
- Bolt tooth form only for tangential drive. Please ask our sales team.
- Press fit permanent drive elements only for continuous conveying, welded sprockets for stop and go
- Welding seam perhaps higher than tube level.
- Keep account of the maximum speed for the drive elements.
- Be considerate of the tolerances of chains and drive belts.
- Keep account of the breaking load of the chains.
- Motor placed centrical.

Steel tube, surface load in N

	Clamping length of tube variants						
Tube diameter in mm	200 mm	400 mm	600 mm	800 mm	1000 mm	1200 mm	1400 mm
16 x 1	80	60					
20 x 1,5	150	100	80				
30 x 1	200	150	120				
30 x 1,5	250	200	160				
32 x 2	300	250	200				
40 x 1,5	1000	800	550	450			
40 x 2	1100	900	650	500			
40 x 3	1400	1300	1200	800	400		
50 x 1,5	1600	1500	1400	900	600		
50 x 2	1800	1700	1600	1000	700	450	
50 x 3	2500	2400	2000	1300	750	550	
60 x 2	2800	2700	2300	1500	800	600	350
60 x 3	3000	2800	2700	2300	1600	700	500
63,5 x 2,9	3500	3400	3300	3200	3000	2000	1800
70 x 2	1700	1700	1700	1500	1100	800	500
70 x 2,9	3500	3500	3500	3200	3000	2000	1800
80 x 2	2000	1800	1700	1600	1400	600	400
80 x 3	3600	3500	3400	3300	3000	2200	1900
88,9 x 2,9	4200	4000	3800	3700	3600	2500	2000
108 x 3,25	4500	4500	4500	4200	4000	3500	2600
133 x 3,6	4600	4500	4500	4300	4300	4200	4000
150 x 4	4600	4500	4500	4300	4300	4200	4000

Plastic tube, surface load in N

	Clamping length						
Tube diameter in mm	200 mm	400 mm	600 mm	800 mm	1000 mm	1200 mm	1400 mm
20 x 1,5	80	40					
30 x 1,8	200	100					
40 x 2,3	300	200					
50 x 2,8	400	300	100				
63 x 3	500	400	350	300			
90 x 7	800	700	500	400	350	200	100
HDPE 88,9 x 6,3	800	700	500	400	350	200	100
HDPE 108 x 7,3	800	700	500	400	350	200	100

Shaft, attached fixing, static loading in N

	Clamping length						
Tube diameter in mm	200 mm	400 mm	600 mm	800 mm	1000 mm	1200 mm	1400 mm
A6	1600	1100	1000				
A8	2400	2200	2000				
A10	3800	3600	3400	4500	3500		
A12	4200	4000	3800	3600	3400	3200	
A14	4600	4400	4200	4000	3800	3600	
A15	4800	4600	4400	4200	4000	3800	
A17	5100	5100	5100	5100	5000	4900	4800
A20	5600	5600	5600	5600	5400	5200	5000
A25	6200	6200	6200	6200	6000	5800	5600

Shaft, loose fixing, static loading in N

	Clamping length						
Tube diameter in mm	200 mm	400 mm	600 mm	800 mm	1000 mm	1200 mm	1400 mm
A6	400	100					
A8 ZK	700	500	250				
A8 SK	800	600	400				
A10 ZK	1400	1000	800	500	350		
A11 SK	1600	1100	900	600	400		
A12	1800	1200	900	600	400	200	
A14	2400	2000	1500	1200	1100	1000	
A15	2800	2400	2000	1700	1300	1200	
A17	3200	3000	2600	2100	1800	1600	1400
A20	4400	4200	4000	3800	3400	3000	2500
A25	4800	4300	4500	4400	4100	3500	3000

ALWAYS ON THE MOVE

- OWN MANUFACTURING
- HIGH QUALITY
- FAST DELIVERY
- INNOVATIVE

ESCH
CONVEYOR
COMPONENTS

Contact us, we gladly provide advice.
T +31 (0) 416 315 645
E sales@eschcc.com

Esch Conveyor Components
Veerweg 14
5145 NS Waalwijk

WWW.ESCHCC.COM

Version 1.2